HUFFMAN ARCHITECTS, PA
632 PERSHING ROAD
RALEIGH, NORTH CAROLINA 27608
PHONE (919) 740-5669

TO: ALL PRIME BIDDERS OF RECORD

This Addendum forms a part of the Contract Documents and modifies the original Project Manual and Construction Documents dated October 6, 2022. Acknowledge receipt of this Addendum in the space provided on the Bid Form. Failure to do so may subject the Bidder to disqualification. This addendum consists of three (3) page, eight (8) 24" x 36", and seventeen (17) 8 ½" x 11" attachments. All documents are distributed digitally.

BID DOCUMENTS

Item No. Description

1. Replace the "Bid Proposal Form" with the attached "Bid Proposal Form."

2. Section 01 2100 Allowances – Make the Following Revisions.

   a. Add 3.3 M "Allowance No. 13: Lump-Sum Allowance: Include the sum of $12,000 for additional plumbing, mechanical, electrical, fire protection, and security infrastructure work in Open Office 206 and Entry 206A located on the second floor."

3. Add the following specification Section "01 2300 Alternates".

4. Section 06 4116 Plastic-Laminated Faced Architecture Cabinets – Make the following revisions.
   a. Replace Section 06 4116 with the attached section 06 4116.

5. Section 08 7100 Door Hardware – Make the Following Revisions.
   a. 1.07 Hardware Schedule – Set #1 Change Door 201 to 206B.
   b. 1.07 Hardware Schedule – Set #2 Add Doors 206 and 206A.
   c. 1.07 Hardware Schedule – Set #3 Delete Door M27B.

DRAWINGS

Item No. Description

1. Replace Sheets D101, D102, A101, A103, A112, A132, A152, and A601 with the attached sheets D101, D102, A101, A103, A112, A132, A152, and A601 all labeled as Revision 1 ADDENDUM NO 2 10/27/2022.

2. Sheet A201 Mezzanine – Elevator Lobby Elevations – Make the following revisions:
   a. On elevation 2/A201 change the following note "NEW SEMI-RECESSED FIRE EXTINGUISHER AND HOSE VALVE CABINET" to read "NEW SEMI-RECESSED FIRE EXTINGUISHER AND CABINET".

3. Sheet FP-100 – Delete work associated with Room 026. The pipe and heads in Room 026 are to remain.

4. Sheet FP-200 – Delete new sprinkler pipe and heads in Room 026. The new sprinkler system shall connect to the existing sprinkler system at Room 026 entry door.

5. Sheet FP-201 – Delete new sprinkler heads in Room 026.

CLARIFICATIONS

Item No. Description

1. Alternate No 1. Is a deduct alternate. All work shall be included in the base bid.

2. In the supplementary general conditions spec section 7.2, it is noted that it is mandatory for a PM and Resident Superintendent to be on site at all times during project progress. A minimum of 10 years' experience of similar scope and responsibilities for each position is noted for their qualifications. Can the qualifications for these two positions be further detailed and also confirmed as both being required on-site for 100% of project progress?
Response: Either the superintendent or the project manager is required to be on site any time a contractor is on site. Both are not required to be on site at the same time. The superintendent and project manager shall have experience similar to this project, i.e. experience on renovation projects of approximately the same size and complexity as this project in occupied buildings.

3. At the mezzanine level, it is clear that the concrete flutes/pans at the deck above ceiling will need to receive 7/8" fireproofing for the entire level. Can you confirm if the work areas at Level 2 require the same, or if this was addressed through earlier phases of work? Also, is any additional fireproofing required at the basement area where the mechanical equipment updates are being made?
Response: The 2nd floor fireproofing was addressed as part of an earlier project. The only required fireproofing work on the 2nd floor will be to repair any damage to areas affected by this project. There are no fireproofing requirements at the basement level.

4. It is noted that asbestos containing materials are being abated ahead of time. Can a copy of the hazardous materials survey be published for awareness of ACM's identified at the areas of work?
Response: All abatement is scheduled to be completed prior to the project bidding. The finalized and complete survey will be made available to the successful low bidder.

5. It is our understanding that more demo has already been performed than what is indicated on the plans to be performed under this contract. Will an updated demo plan be provided for anticipated scope update?
Response: See DRAWINGS Item 1 above.

6. There have been difficulties finding bidders for major scopes of work. Can a bid extension of 1 week be granted to allow additional time to generate more interest?
Response: The bid will not be extended.

7. Stainless steel toilet partitions are a building standard. HDPE or other toilet partition materials will not be allowed.

8. Coordination drawings shall be required as indicated in the PME specification sections.

9. We would like to get clarification on the Allowances in regards to which allowances should be labor and materials or material only.
    a. Does the lump sum also cover installation.
        i. Allowance 3 – Interior signage
        Response: Allowance 3 shall cover all labor, material, taxes, costs for receiving and handling at project site, installation, and overhead and profit.
        ii. Allowance 4 – F40 Floor tile
        iii. Allowance 5 – B40 Tile base
        iv. Allowance 6 – W30 Wall tile
        v. Allowance 7 – W40 Wall tile
        vi. Allowance 8 – F50 Vinyl composite tile
        vii. Allowance 9 – F10 Carpet tile
        viii. Allowance 10 – F20 Carpet tile
        Response: Allowances 4, 5, 6, 7, 8, 9, and 10 are to cover the cost of the material including taxes, freight, and delivery to the project site. Contractor's costs for

receiving and handling at Project site, labor, installation, overhead and profit and similar costs related to products and materials under allowance shall be included as part of the Contract Sum and not part of the allowance.

ix. Allowance 11 – Plaster Patching
Response: Allowance 11 shall cover all labor, material, taxes, costs for receiving and handling at project site, installation, and overhead and profit.

b. We would also like to point out that in the allowances all the Carpet, tile, and terrazzo tile and base are listed but in the finish schedule it calls for rubber base as well.
Response: The rubber base is not a part of an allowance. The rubber base shall be provided and installed under the base bid.

c. We would like to know if in our base bid should we only submit rubber base or would you be making adjustments to the allowances to include rubber base, as most flooring subs also provide rubber base for install.
Response: The allowance will not be adjusted for the rubber base. The rubber base shall be provided and installed under the base bid.

10. Will there be a signage schedule provides so we can get pricing for the signage.
Response: A signage schedule will be provided to the successful low bidder. The amount of Allowance 3 is the only pricing to be included for signage.

11. Can we get clarification on the doors that require sidelights?
    a. In the specs it only lists hollow metal frames and glass, there is no mention of store fronts which we would normally classify theses as.
    Response: All sidelights are hollow metal to match the sidelights on the 2nd floor. There are no storefront frames in the project.

12. Allowances 1 and 12 have an allowance given with indications to still receive bids on these scopes. Is the intention to add the $40,000 and $80,000 on top of the bids received?
Response: All allowances must be included in the base bid. The successful low bidder will be given additional documentation and a list of vendors from which to request bids for security (allowance no 1), signage (allowance no 3), and voice/data (allowance no 12). The general contractor will contract with the successful low bid vendor for all three items and the cost of bid will be applied to the specific allowance.

END OF ADDENDUM NUMBER TWO

Hufman Architects P.A. CORPORATE 52498 NORTH CAROLINA

ERIC M. SOWERS REGISTERED ARCHITECT 9314 NORTH CAROLINA RALEIGH, N.C.

10/27/2022

WAKE COUNTY OFFICE BUILDING
Mezzanine and 2nd Floor Fit-Up

Project No. 22-092

BID PROPOSAL FORM

(USE THIS FORM ONLY. Bids submitted on anything other than the form(s) provided may be considered non-responsive and subject to rejection)

SINGLE PRIME GENERAL CONSTRUCTION WORK
FORMAL CONTRACT

BIDDERS NAME

_____ License Number: _____

BASE BID PROPOSAL

The undersigned, as Bidder, hereby declares that the only person or persons interested in this Proposal as principal or principals is or are named herein and that no other person than herein mentioned has any interest in this Proposal or in the Contract to be entered into; that this Proposal is made without connection with any other person, company or parties making a Bid or Proposal; and that it is in all respects fair and in good faith without collusion or fraud.

The Bidder further declares that he has examined the site of the work and informed himself fully in regard to all conditions pertaining to the place where the work is to be done; that he has examined the specifications for the work and the Contract Documents relative thereto, including addenda, if any, and has read all special provisions furnished prior to the opening of bids; that he has satisfied himself relative to the work to be performed.

The Bidder proposes and agrees if this Proposal is accepted to contract with the County of Wake with a definite understanding that no money will be allowed for extra work except as set forth in the General Conditions and Contract Documents, for the sum of:

Base Bid _____
_____ Dollars ($_____).

SUBCONTRACTOR LISTING

PLUMBING SUBCONTRACTOR

Name: _____ License Number: _____

$_____

HVAC SUBCONTRACTOR

Name: _____ License Number: _____

$_____

ELECTRICAL SUBCONTRACTOR

Name: _____ License Number: _____

$_____

(OTHER SUBCONTRACTOR)

Name: _____ License Number: _____

$_____

(OTHER SUBCONTRACTOR)

Name: _____ License Number: _____

$_____

ALTERNATES

Should any of the alternates as described in the specifications be accepted, the amount written below shall be the amount to “add to” or "deduct from" the Base Bid. If to be "deducted from" Base Bid, put minus sign (-) in parentheses at head of alternate and plus sign (+) in parentheses if to be added. Refer to Section 01 2300 for description of alternate.

Alternate No. 1: Data Center Computer Room Air Conditioning Units (CRAC) Dollars ($_____)

UNIT PRICES

Unit prices are complete for labor, equipment, material, overhead and profit. Base bid includes the stipulated allowance quantity of each item. Unused amount will be credited to the Owner by change order at the end of the project.

Description	Unit Price	Unit Measure	Allowance Units
Wall and Ceiling Exit Signs		Each	
Fire Alarm Speaker/Strobe		Each	
Duplex Receptacle		Each	
Sprinkler Head		Each	
Data Drop		Each	
Plaster Patching		SF	20

Provide with the bid - Under GS 143-128.2(c) the bidder shall identify and include **with the bid**, **Wake County Form MBE-1 Identity of Minority Business Participation**, the minority businesses that it will use on the project with the total dollar value of the bids that will be performed by the minority businesses. **All bidders must submit, with the bid, Wake County Form MBE-1 Identity of Minority Business Participation Form even if there is zero MBE participation.**

Also include with the bid a list of the good faith efforts made to solicit minority participation in the bid effort, **Wake County Form MBE-2** Listing of the Good Faith Effort.

NOTE: A contractor that performs all of the work with its own workforce may submit **Wake County Form MBE-3-**Intent to Perform Contract with Own Workforce, to that effect in lieu of **Wake County Form MBE-2-**Listing of the Good Faith Effort.

After the bid opening - The Owner will consider all bids and alternates and determine the lowest responsible, responsive bidder. Upon notification of being the apparent lowest responsible, responsive bidder, the bidder must then file within 72 hours of the notification **Wake County Form MBE-4**.It includes that portion of the Work to be Performed by Minority Business. Also included is a description of the portion of work to be executed by minority businesses, expressed as a percentage of the total contract price, which is equal to or more than the 10% goal established. This affidavit shall give rise to the presumption that the bidder has made the required good faith effort and **Wake County Form MBE-5** is not necessary,

OR

If less than the 10% goal, **Wake County Form MBE-5** documenting all good faith efforts to meet the goal shall be provided. The document must include evidence of all good faith efforts that were implemented, including any advertisements, solicitations and other specific actions demonstrating recruitment and selection of minority businesses for participation in the project.

Note: Bidders must always submit **with their bid** the Identification of Minority Business Participation Form listing all MBE contractors, vendors, and suppliers that will be used. If there is no MBE participation, then enter none or zero on the form. **Wake County Form MBE-2** or **Wake County Form MBE-3** as applicable must also be submitted with the bid. Failure to submit a required affidavit or form with the bid or within the time required may be grounds for rejection of the bid.

Attach to Bid Form

WAKE COUNTY FORM MBE-1 (2002)
IDENTIFICATION OF MINORITY BUSINESS PARTICIPATION FORM

I ____
(Name of Bidder)
do hereby certify that on this project we will use the following minority business enterprises as construction subcontractors, vendors, suppliers or providers of professional services.

Firm Name, Address, Phone No.	Work Type	Minority Category

Minority Categories: Black, African American (B), Hispanic (H), Asian American (A), American Indian (I), Female (F), Socially and Economically Disadvantaged (D)

The total value of minority business contractors will be $___________________________________.

Attach to Bid Form

Wake County – Form MBE-2 (2002)

Listing of the Good Faith Effort

Affidavit of _____
(Name of Bidder)

I have made a good faith effort to comply under the following areas checked:

Bidders must earn at least 50 points from the good faith efforts listed for their bid to be considered responsive. (1 NC Administrative Code 30 l.0101)

□□**1 – (10 pts)** Contacted minority businesses that reasonably could have been expected to submit a quote and that were known to the contractor, or available on State or local government maintained lists, at least 10 days before the bid date and notified them of the nature and scope of the work to be performed.

□□**2. -(10 pts)** Made the construction plans, specifications and requirements available for review by prospective minority businesses, or providing these documents to them at least 10 days before the bids are due.

□□**3 - (15 pts)** Broken down or combined elements of work into economically feasible units to facilitate minority participation.

□□**4 - (10 pts)** Worked with minority trade, community, or contractor organizations identified by the Office of Historically Underutilized Businesses and included in the bid documents that provide assistance in recruitment of minority businesses.

□□**5 - (10 pts)** Attended prebid meetings scheduled by the public owner.

□□**6 - (20 pts)** Provided assistance in getting required bonding or insurance or provided alternatives to bonding or insurance for subcontractors.

□□**7 - (15 pts)** Negotiated in good faith with interested minority businesses and did not reject them as unqualified without sound reasons based on their capabilities. Any rejection of a minority business based on lack of qualification should have the reasons documented in writing.

□□**8 - (25 pts)** Provided assistance to an otherwise qualified minority business in need of equipment, loan capital, lines of credit, or joint pay agreements to secure loans, supplies, or letters of credit, including waiving credit that is ordinarily required. Assisted minority businesses in obtaining the same unit pricing with the bidder's suppliers in order to help minority businesses in establishing credit.

□□**9 - (20 pts)** Negotiated joint venture and partnership arrangements with minority businesses in order to increase opportunities for minority business participation on a public construction or repair project when possible.

□□**10 - (20 pts)** Provided quick pay agreements and policies to enable minority contractors and suppliers to meet cash flow demands.

The undersigned, if apparent low bidder, will inter into a formal agreement with the firms listed in the Identification of Minority Business Participation schedule conditional upon scope of contract to be executed with the Owner. Substitution of contractors must be in accordance with GS 143-128.2(d). Failure to abide by this statutory provision will constitute a breach of the contract.

The undersigned hereby certifies that he or she has read the terms of the minority business commitment and is authorized to bind the bidder to the commitment herein set forth.

Date: _____ Name of Authorized Officer _____

Signature _____

Title: _____

SEAL

State of North Carolina, County of _____

Subscribed and sworn to before me this __ day of _____ 20__

Notary Public _____

My commission expires _____

Attach to Bid Only If Bidder Performs All Work With Own Workforces

Wake County Form MBE-3 (2002)
Intent to Perform Contract with Own Workforce

Affidavit of

_____
(Name of Bidder)

I hereby certify that it is our intent to perform 100% of the work required for the project

_____
(Name of Project)

In making this certification, the Bidder states that the Bidder does not customarily subcontract elements of this type project, and normally performs and has the capability to perform and will perform all elements of the work on this project with his/her own current work forces; and

The Bidder agrees to provide any additional information or documentation requested by the owner in support of the above statement.

The undersigned hereby certifies that he or she has read this certification and is authorized to bind the Bidder to the commitments herein contained.

Date: _____ Name of Authorized Officer: _____

Signature: _____

Title: _____

SEAL

State of North Carolina, County of _____

Subscribed and sworn to before me this __ day of _____ 20__

Notary Public _____

My commission expires _____

CERTIFICATION OF PROPOSER:

The Bidder further proposes and agrees hereby to commence work under his Contract on a date to be specified in a written order of Wake County and shall fully complete all work thereunder within the number of consecutive calendar days stipulated in the Supplementary General Conditions. Applicable liquidated damages shall be as stated in Supplementary General Conditions.

The undersigned acknowledges receipt of the following addenda issued during the time of bidding and includes the changes therein in this Proposal:

Addendum Number _____, Dated _____

Addendum Number _____, Dated _____

Addendum Number _____, Dated _____

The undersigned agrees that this Proposal will not be withdrawn for a period of sixty (60) days.

The undersigned agrees to comply with the E-Verify requirements of the General Statutes of North Carolina, all contractors, including any subcontractors employed by the contractor(s), by submitting a bid, proposal or any other response, or by providing any material, equipment, supplies, services, etc., attest and affirm that they are aware and in full compliance with Article 2 of Chapter 64, (NCGS64-26(a)) relating to the E-Verify requirements.

The undersigned agrees not to discriminate in any manner on the basis of race, natural hair or hairstyles, ethnicity, creed, color, sex, pregnancy, marital or familial status, sexual orientation, gender identity or expression, national origin or ancestry, marital or familial status, pregnancy, National Guard or veteran status, religious belief or non-belief, age, or disability with reference to the subject matter of this Contract. The Parties agree to comply with the provisions and intent of Wake County Ordinance SL 2017-4. This anti-discrimination provision shall be binding on the successors and assigns of the Parties with reference to the subject matter of this Contract.

The undersigned further agrees that in the case of failure on his part to execute the said Contract and the Bond within ten (10) consecutive calendar days after written notice being given of the award of the Contract, the check, cash or Bid Bond accompanying this Bid shall be paid into the funds of Owner's Account set aside for this Project, as liquidated damages for such failure; otherwise the check, cash or Bid Bond accompanying this Proposal shall be returned to the undersigned.

Respectfully submitted this __ day of _____, 20__

PROPOSER SIGNATURE PAGE

_____
(Name of Firm or Corporation making Bid)

By: _____

WITNESS:

_____
(Proprietorship or Partnership)

Title: _____
(Owner, Partner, or Corporation President or Vice President only)

Address: _____
_____
_____

Affix Corporate Seal Above

License Number: _____

ATTEST:

By: _____

Title: _____
(Corporation Secretary or Assistant Secretary only)

SECTION 01 2300 - ALTERNATES

PART 1 - GENERAL

1.1 RELATED DOCUMENTS

A. Drawings and general provisions of the Contract, including General and Supplementary Conditions and other Division 01 Specification Sections, apply to this Section.

1.2 SUMMARY

A. Section includes administrative and procedural requirements for alternates.

1.3 DEFINITIONS

A. Alternate: An amount proposed by bidders and stated on the Bid Form for certain work defined in the bidding requirements that may be added to or deducted from the base bid amount if Owner decides to accept a corresponding change either in the amount of construction to be completed or in the products, materials, equipment, systems, or installation methods described in the Contract Documents.

1. Alternates described in this Section are part of the Work only if enumerated in the Agreement.
2. The cost or credit for each alternate is the net addition to or deduction from the Contract Sum to incorporate alternate into the Work. No other adjustments are made to the Contract Sum.

1.4 PROCEDURES

A. Coordination: Revise or adjust affected adjacent work as necessary to completely integrate work of the alternate into Project.

1. Include as part of each alternate, miscellaneous devices, accessory objects, and similar items incidental to or required for a complete installation whether or not indicated as part of alternate.

B. Notification: Immediately following award of the Contract, notify each party involved, in writing, of the status of each alternate. Indicate if alternates have been accepted, rejected, or deferred for later consideration. Include a complete description of negotiated revisions to alternates.

C. Execute accepted alternates under the same conditions as other work of the Contract.

D. Schedule: A schedule of alternates is included at the end of this Section. Specification Sections referenced in schedule contain requirements for materials necessary to achieve the work described under each alternate.

PART 2 - PRODUCTS (Not Used)

PART 3 - EXECUTION

3.1 SCHEDULE OF ALTERNATES

A. Alternate No. 1: (DEDUCT) Date Center Computer Room Air Conditioning Units (CRAC).
   1. Base Bid: Provide all work associated with All demolition and new work associated with replacing the Data Center Computer Room Air Conditioning units (CRAC). The CRAC unit replacement work is indicated on the following sheets: M101, M103, M104, M204, M205, E101, E102, E103, E203, E206, FA100, and FA200.

   2. Alternate: Do not include any demolition or new work associated with replacing the Data Center Computer Room Air Conditioning units (CRAC). The CRAC unit replacement work is indicated on the following sheets: M101, M103, M104, M204, M205, E101, E102, E103, E203, E206, FA100, and FA200.

END OF SECTION 01 2300

SECTION 06 4116 - PLASTIC-LAMINATE-FACED ARCHITECTURAL CABINETS

PART 1 - GENERAL

1.1 RELATED DOCUMENTS

A. Drawings and general provisions of the Contract, including General and Supplementary Conditions and Division 01 Specification Sections, apply to this Section.

1.2 SUMMARY

A. Section Includes:

1. Plastic-laminate-faced architectural cabinets and shelves.
2. Cabinet hardware.

B. Related Requirements:

1. Section 06 1000 "Rough Carpentry" for wood furring, blocking, shims, and hanging strips required for installing cabinets and concealed within other construction before cabinet installation.
2. Section 12 3623 “Plastic Laminate Clad Countertops.
3. Section 12 3661 “Simulated Stone Countertops” for grommets and counter support brackets.

1.3 PRE-INSTALLATION MEETINGS

A. Pre-installation Conference: Conduct conference at Project site.

1.4 ACTION SUBMITTALS

A. Product Data: For each type of product, including high-pressure decorative laminate and cabinet hardware and accessories.

B. Shop Drawings: Show location of each item, dimensioned plans and elevations, large-scale details, attachment devices, and other components.

1. Show details full size.
2. Show locations and sizes of furring, blocking, and hanging strips, including concealed blocking and reinforcement specified in other Sections.
3. Show locations and sizes of cutouts and holes for items installed in architectural plastic-laminate cabinets.
4. Apply AWI Quality Certification Program label to Shop Drawings.

C. Samples for Verification:

1. Plastic laminates, 8 by 10 inches (200 by 250 mm), for each color, pattern, and surface finish.

2. Thermoset decorative panels, 8 by 10 inches (200 by 250 mm), for each color, pattern, and surface finish.
3. Exposed cabinet hardware and accessories, one unit for each type and finish.

1.5 INFORMATIONAL SUBMITTALS

A. Qualification Data: For fabricator.

B. Woodwork Quality Standard Compliance Certificates: AWI Quality Certification Program certificates.

1.6 QUALITY ASSURANCE

A. Fabricator Qualifications: Shop that employs skilled workers who custom fabricate products similar to those required for this Project and whose products have a record of successful in-service performance. Shop is a certified participant in AWI's Quality Certification Program.

B. Installer Qualifications: Certified participant in AWI's Quality Certification Program.

1.7 DELIVERY, STORAGE, AND HANDLING

A. Do not deliver cabinets until painting and similar operations that could damage woodwork have been completed in installation areas. If cabinets must be stored in other than installation areas, store only in areas where environmental conditions comply with requirements specified in "Field Conditions" Article.

1.8 FIELD CONDITIONS

A. Environmental Limitations: Do not deliver or install cabinets until building is enclosed, wet work is complete, and HVAC system is operating and maintaining temperature and relative humidity at occupancy levels during the remainder of the construction period.

B. Field Measurements: Where cabinets are indicated to fit to other construction, verify dimensions of other construction by field measurements before fabrication, and indicate measurements on Shop Drawings. Coordinate fabrication schedule with construction progress to avoid delaying the Work.

1. Locate concealed framing, blocking, and reinforcements that support cabinets by field measurements before being enclosed, and indicate measurements on Shop Drawings.

C. Established Dimensions: Where cabinets are indicated to fit to other construction, establish dimensions for areas where cabinets are to fit. Provide allowance for trimming at site, and coordinate construction to ensure that actual dimensions correspond to established dimensions.

1.9 COORDINATION

A. Coordinate sizes and locations of framing, blocking, furring, reinforcements, and other related units of Work specified in other Sections to ensure that cabinets can be supported and installed as indicated.

PART 2 - PRODUCTS

2.1 PLASTIC-LAMINATE-FACED ARCHITECTURAL CABINETS AND OPEN SHELVING

A. Quality Standard: Unless otherwise indicated, comply with the "Architectural Woodwork Standards" for grades of architectural plastic-laminate cabinets indicated for construction, finishes, installation, and other requirements.

1. Provide labels and certificates from AWI certification program indicating that woodwork, including installation, complies with requirements of grades specified.

B. Grade: Custom.

C. Type of Construction: Face frame.

D. Cabinet, Door and Drawer Front Interface Style: Flush overlay.

E. Reveal Dimension: 1/2 inch (13 mm).

F. High-Pressure Decorative Laminate: NEMA LD 3, grades as indicated or if not indicated, as required by woodwork quality standard.

1. Manufacturers: Subject to compliance with requirements, provide the products by one of the following:

a. Formica Corporation.
b. Lamin-Art, Inc.
c. Phanolam/Pionite.

G. Laminate Cladding for Exposed Surfaces:

1. Horizontal Surfaces: Grade HGS.
2. Postformed Surfaces: Grade HGP.
3. Vertical Surfaces: Grade HGS.
4. Edge Banding: 3mm PVC.
5. Pattern Direction: Vertically for drawer fronts, doors, and fixed panels.

H. Materials for Semi-exposed Surfaces:

1. Surfaces Other Than Drawer Bodies: High-pressure decorative laminate, NEMA LD 3, Grade VGS.

a. Edges of Thermoset Decorative Panel Shelves: PVC or polyester edge banding.
b. For semi-exposed backs of panels with exposed plastic-laminate surfaces, provide surface of high-pressure decorative laminate, NEMA LD 3, Grade VGS.

2. Drawer Sides and Backs: Thermoset decorative panels with PVC edge banding.
3. Drawer Bottoms: Thermoset decorative panels.

I. Concealed Backs of Panels with Exposed Plastic-Laminate Surfaces: High-pressure decorative laminate, NEMA LD 3, Grade BKL.

J. Drawer Construction: Fabricate with exposed fronts fastened to subfront with mounting screws from interior of body.

1. Join subfronts, backs, and sides with glued rabbeted joints supplemented by mechanical fasteners or glued dovetail joints.

K. Colors, Patterns, and Finishes: Provide materials and products that result in colors and textures of exposed laminate surfaces complying with the following requirements:

1. As selected by the Architect from manufacturer's full range.

2.2 WOOD MATERIALS

A. Wood Products: Provide materials that comply with requirements of referenced quality standard for each type of woodwork and quality grade specified unless otherwise indicated.

1. Wood Moisture Content: 5 to 10 percent.

B. Composite Wood Products: Provide materials that comply with requirements of referenced quality standard for each type of woodwork and quality grade specified unless otherwise indicated.

1. Hardboard: AHA A135.4.
2. Veneer-Faced Panel Products (Hardwood Plywood): HPVA HP-1, made with adhesive containing no urea formaldehyde.
3. Thermoset Decorative Panels: Particleboard or medium-density fiberboard finished with thermally fused, melamine-impregnated decorative paper and complying with requirements of NEMA LD 3, Grade VGL, for test methods 3.3, 3.4, 3.6, 3.8, and 3.10.

2.3 CABINET HARDWARE AND ACCESSORIES

A. Frameless Concealed Hinges (European Type): ANSI/BHMA A156.9, B01602, 135 degrees of opening, self-closing.

B. Wire Pulls: Back mounted, solid metal, Mockett DP7B Matte Black.

C. Catches: Magnetic catches, BHMA A156.9, B03141.

A. Adjustable Shelf Standards and Supports: BHMA A156.9, B04071; with shelf rests, B04081.

B. Shelf Rests: BHMA A156.9, B04013; metal.

C. Drawer Slides: BHMA A156.9, BO5091.

1. Heavy-Duty (Grade 1HD-100 and Grade 1HD-200): Side mounted, full-overtravel-extension type, zinc-plated steel ball-bearing slides.

D. Door Locks: ANSI/BHMA A156.11, E07121.

E. Drawer Locks: ANSI/BHMA A156.11, E07041.

F. Grommets for Cable Passage through Countertops: 3-inch OD, gray, molded plastic grommets and matching plastic caps with slot for wire passage.

G. Exposed Hardware Finishes: For exposed hardware, provide finish that complies with ANSI/BHMA A156.18 for BHMA finish as selected by the Architect.

1. Satin Stainless Steel: ANSI/BHMA 630.

H. For concealed hardware, provide manufacturer's standard finish that complies with product class requirements in ANSI/BHMA A156.9.

I. Adjustable Shelf Standards and Supports: ANSI/BHMA A156.9, B04071 with shelf rests, B4081.

2.4 MISCELLANEOUS MATERIALS

A. Furring, Blocking, Shims, and Hanging Strips: Softwood or hardwood lumber, kiln dried to less than 15 percent moisture content.

B. Anchors: Select material, type, size, and finish required for each substrate for secure anchorage. Provide metal expansion sleeves or expansion bolts for post-installed anchors. Use nonferrous-metal or hot-dip galvanized anchors and inserts at inside face of exterior walls and at floors.

C. Adhesives: Do not use adhesives that contain urea formaldehyde.

D. Adhesive for Bonding Plastic Laminate: Contact cement.

1. Adhesive for Bonding Edges: Hot-melt adhesive.

2.5 FABRICATION

A. Fabricate cabinets to dimensions, profiles, and details indicated.

B. Complete fabrication, including assembly and hardware application, to maximum extent possible before shipment to Project site. Disassemble components only as necessary for shipment and installation. Where necessary for fitting at site, provide ample allowance for scribing, trimming, and fitting.

1. Trial fit assemblies at fabrication shop that cannot be shipped completely assembled. Install dowels, screws, bolted connectors, and other fastening devices that can be removed after trial fitting. Verify that various parts fit as intended and check measurements of assemblies against field measurements before disassembling for shipment.

C. Shop-cut openings to maximum extent possible to receive hardware, appliances, electrical work, and similar items. Locate openings accurately and use templates or roughing-in diagrams to produce accurately sized and shaped openings. Sand edges of cutouts to remove splinters and burrs.

PART 3 - EXECUTION

3.1 PREPARATION

A. Before installation, condition cabinets to average prevailing humidity conditions in installation areas.

B. Before installing cabinets, examine shop-fabricated work for completion and complete work as required.

3.2 INSTALLATION

A. Assemble cabinets and complete fabrication at Project site to the extent that it was not completed in the shop.

B. Install cabinets level, plumb, true and straight. Shim as required with concealed shims. Install level and plumb to a tolerance of 1/8 inch in 96 inches (3 mm in 2400 mm).

C. Scribe and cut cabinets to fit adjoining work, refinish cut surfaces, and repair damaged finish at cuts.

D. Anchor cabinets to anchors or blocking built in or directly attached to substrates. Secure with countersunk, concealed fasteners and blind nailing. Use fine finishing nails or finishing screws for exposed fastening, countersunk and filled flush with woodwork.

1. Use filler matching finish of items being installed.

E. Cabinets: Install without distortion so doors and drawers fit openings properly and are accurately aligned. Adjust hardware to center doors and drawers in openings and to provide unencumbered operation. Complete installation of hardware and accessory items as indicated.

1. Install cabinets with no more than 1/8 inch in 96-inch (3 mm in 2400-mm) sag, bow, or other variation from a straight line.
2. Fasten wall cabinets through back, near top and bottom, and at ends not more than 16 inches (400 mm) o.c. with No. 10 wafer-head sheet metal screws through metal backing or metal framing behind wall finish.

F. Counter Support Brackets: Surface-mount as indicated on the Drawings. Fasteners shall be as required for the substrates. Bracket spacing shall be as indicated.

3.3 ADJUSTING AND CLEANING

A. Repair damaged and defective cabinets, where possible, to eliminate functional and visual defects; where not possible to repair, replace woodwork. Adjust joinery for uniform appearance.

B. Clean, lubricate, and adjust hardware.

C. Clean cabinets on exposed and semi-exposed surfaces.

END OF SECTION 06 4116

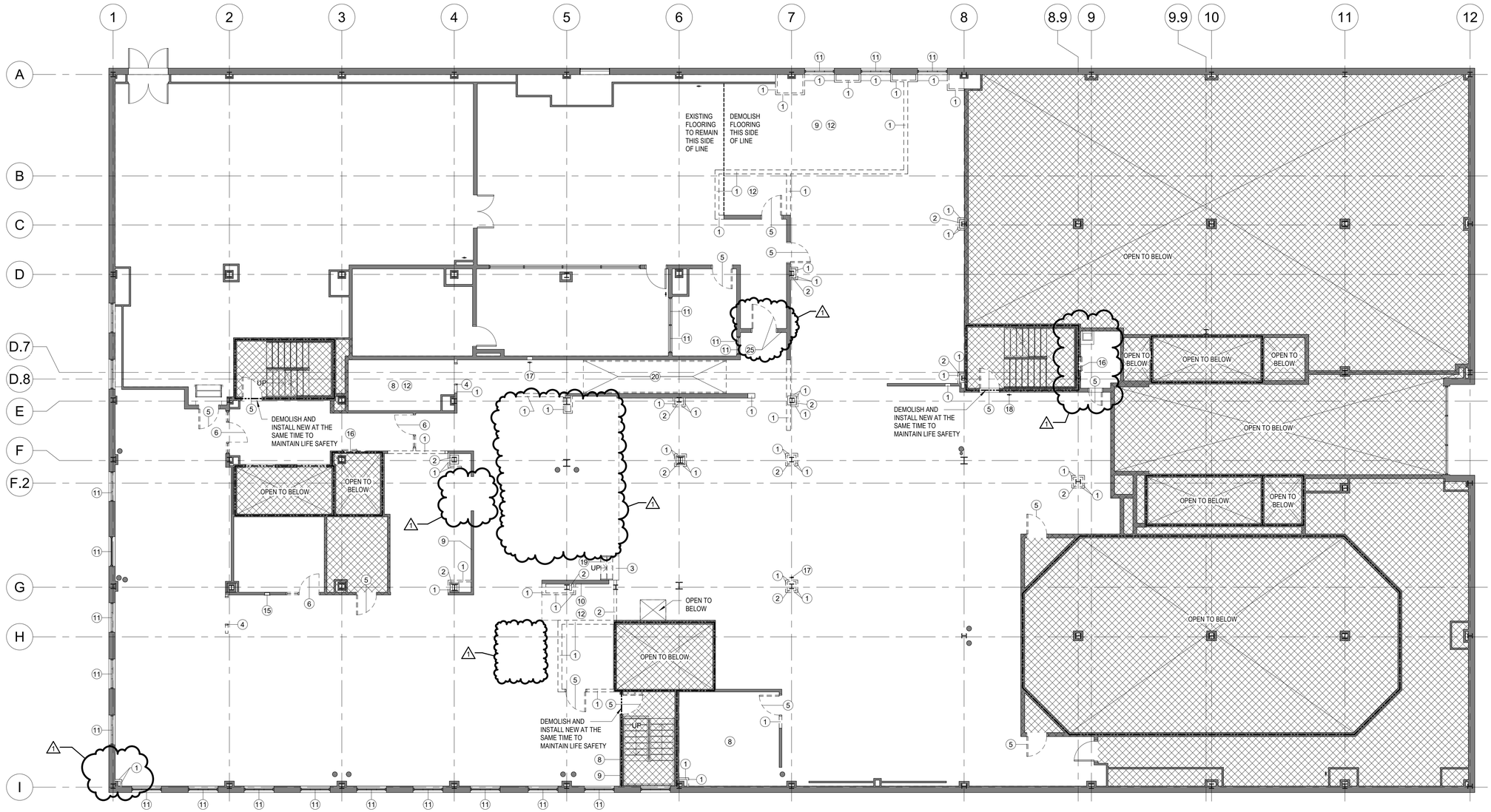

1 / D101 MEZZANINE - DEMOLITION

1/8" = 1'-0"

PLAN LEGEND

EXISTING WALLS	AREA OF NO WORK
DEMOLISHED WALLS	SHAFT (OPEN TO BELOW)
DEMOLISHED	FEHC — FIRE EXTINGUISHER AND HOSE VALVE CABINET (SEMI-RECESSED TYPE)
BEYOND	FEC — FIRE EXTINGUISHER CABINET (SEMI-RECESSED TYPE)
UNRATED CONSTRUCTION	FE — FIRE EXTINGUISHER
UNRATED CONSTRUCTION (TEMPORARY)	WALL-MOUNTED DISPLAY (NIC)
2-HR FIRE BARRIER (EXISTING)	
2-HR FIRE BARRIER (NEW)	

NOTES

1. ALL DIMENSIONS ARE TO FINISHED FACE OF WALL.
2. COORDINATE AND PROVIDE BACKING/BLOCKING FOR MILLWORK AND ITEMS ATTACHED OR MOUNTED TO WALLS OR CEILINGS.
3. LOCATE DOOR OPENINGS 3" OFF PERPENDICULAR WALL, UON.
4. FINISH WALL TO FLOOR FOR BASE ADHESION.
5. THE GENERAL CONTRACTOR SHALL FIELD VERIFY ALL DIMENSIONS AND CONDITIONS.

DEMOLITION KEY NOTES

KEY	DESCRIPTION
1	DEMOLISH EXISTING PARTITION WALL AS NEEDED FOR NEW CONSTRUCTION
2	DEMOLISH EXISTING TERRACOTTA TILE - DEMOLISH AT COLUMN ON ALL SIDES
3	DEMOLISH EXISTING RAISED FLOOR TO EXISTING SLAB BELOW AS NEEDED FOR NEW STAIR - SEE STRUCTURAL
4	DEMOLISH EXISTING FRAME - DEMOLISH EXISTING WALL AS REQUIRED FOR NEW ROUGH OPENING
5	DEMOLISH EXISTING DOOR AND FRAME - DEMOLISH EXISTING WALL AS REQUIRED FOR NEW ROUGH OPENING
6	DEMOLISH EXISTING DOOR, FRAME, AND SIDELITES - DEMOLISH EXISTING WALL AS REQUIRED FOR NEW ROUGH OPENING
8	DEMOLISH EXISTING CHAIR RAIL (ALL LOCATIONS THIS ROOM)
9	REMOVE AND DISPOSE EXISTING WALL COVERING - PATCH AND PREP EXISTING WALL TO RECEIVE NEW PAINT FINISH AND DEVICES AS APPLICABLE (ALL WALLS TO REMAIN IN THE WORK AREA)
10	PATCH AND PREP EXISTING WALL TO RECEIVE NEW PAINT FINISH AND DEVICES AS APPLICABLE (ALL LOCATIONS THIS ROOM)
11	DEMOLISH EXISTING WINDOW BLINDS
12	DEMOLISH EXISTING VCT FLOORING AND ASSOCIATED BASE (ALL LOCATIONS THIS ROOM)
13	DEMOLISH EXISTING CERAMIC TILE FLOORING AND ASSOCIATED BASE (ALL LOCATIONS THIS ROOM)
14	DEMOLISH EXISTING CARPET TILE AND ASSOCIATED BASE AS NEEDED FOR NEW CONSTRUCTION - SALVAGE FOR REUSE IN WORK AREAS ON SECOND FLOOR WHERE CARPET TILE IS DEMOLISHED
15	DEMOLISH EXISTING FIRE EXTINGUISHER CABINET, SALVAGE FIRE EXTINGUISHER FOR REUSE - DEMOLISH WALL AS NEEDED FOR NEW CABINET

DEMOLITION KEY NOTES

KEY	DESCRIPTION
16	DEMOLISH EXISTING FIRE EXTINGUISHER AND HOSE VALVE CABINET, SALVAGE FIRE EXTINGUISHER FOR REUSE
17	DEMOLISH EXISTING FIRE EXTINGUISHER MOUNTING HARDWARE, SALVAGE FIRE EXTINGUISHER FOR REUSE - DEMOLISH WALL AS NEEDED FOR NEW CABINET
18	DEMOLISH EXISTING FIRE EXTINGUISHER MOUNTING HARDWARE, SALVAGE FIRE EXTINGUISHER FOR REUSE
19	DEMOLISH ALUMINUM STAIR, CARPET TREAD, HANDRAILS, AND ASSOCIATED HARDWARE TO EXISTING SLAB BELOW; PREPARE SLAB TO RECEIVE NEW STAIRS/FLOOR FINISH - SEE STRUCTURAL
20	DEMOLISH ALUMINUM RAMP, RAMP FINISH, HANDRAILS, AND ASSOCIATED HARDWARE TO EXISTING SLAB BELOW; PREPARE SLAB TO RECEIVE NEW RAMP/FLOOR FINISH - SEE STRUCTURAL
21	DEMOLISH EXISTING ACT CEILING (TILES AND GRID) AS REQUIRED FOR NEW WALL
22	DEMOLISH EXISTING ACT CEILING (TILE ONLY - GRID TO REMAIN)
23	DEMOLISH EXISTING GWB CEILING
24	DEMOLISH EXISTING WOOD TRANSITION STRIP
25	REMOVE EXISTING DOOR, HARDWARE, FRAME, AND CARD READER TO BE INSTALLED IN THE TEMPORARY WALL AT DATA CENTER M42
26	DEMOLISH EXISTING DOOR AND FRAME AND PATCH WALL
27	DEMOLISH EXISTING WALL AS REQUIRED FOR NEW DOOR AND FRAME

DEMOLITION GENERAL NOTES

1. SEE PME DRAWINGS FOR MORE SPECIFIC HVAC, ELECTRICAL, AND PLUMBING DEMOLITION NOTES.
2. GENERAL CONTRACTOR IS RESPONSIBLE FOR ALL GENERAL CONSTRUCTION DEMOLITION. MECHANICAL CONTRACTOR IS RESPONSIBLE FOR MECHANICAL DEMOLITION. PLUMBING CONTRACTOR IS RESPONSIBLE FOR PLUMBING DEMOLITION. ELECTRICAL CONTRACTOR IS RESPONSIBLE FOR ELECTRICAL DEMOLITION, UNLESS OTHERWISE NOTED.
3. ALL TRENCHING, CORING, ETC. IS TO BE DONE BY THE CONTRACTOR OF THE RESPECTIVE TRADE INVOLVED. EACH PRIME CONTRACTOR IS RESPONSIBLE FOR THEIR OWN FIRE PENETRATION SYSTEMS, FOR NEW PENETRATIONS, AND FOR PATCHING ANY NEW HOLES MADE.
4. THE TERM "REMOVED" SHALL BE DEFINED TO MEAN REMOVE AND DISPOSE OF OFFSITE IN A LEGAL, ENVIRONMENTALLY RESPONSIBLE MANNER.
5. WHERE WALLS, FLOORS, EQUIPMENT, ETC. ARE NOTED AS BEING REMOVED AND THIS CREATES VOID OR DAMAGE IN EXISTING WALLS OR FLOORS, CONTRACTOR IS RESPONSIBLE FOR REPAIRING WALL OR FLOOR WITH SIMILAR MATERIALS AND FINISHES AS ADJACENT CONSTRUCTION AS REQUIRED TO RESTORE FIRE RATINGS AND RECEIVE NEW FINISHES AS INDICATED ON FINISH PLANS.
6. EACH CONTRACTOR IS RESPONSIBLE FOR RELOCATING OR REPLACING THEIR UTILITIES LOCATED WITHIN EXISTING CONSTRUCTION THAT SHALL BE REMOVED. (I.E. PLUMBING CONTRACTOR IS RESPONSIBLE FOR RELOCATING PLUMBING VENTS AND ELECTRICAL CONTRACTOR IS RESPONSIBLE FOR RELOCATING DEVICES, RACEWAY, CONDUIT, ETC.)
7. REMOVE EXISTING ACT CEILING AS NOTED ON PLANS. EXISTING PLASTER SUB-CEILING TO REMAIN AND BE PATCHED TO MAINTAIN FIRE RATING.
8. LEAVE FLOORS, CEILINGS, AND OTHER WALLS WITH A SMOOTH AND FINISHED APPEARANCE WHERE WALLS HAVE BEEN REMOVED.
9. REMOVE EXISTING FLOOR FINISH AS OCCURS DOWN TO EXISTING TERRAZZO FLOOR OR SLAB WITHIN WORK AREA. PREPARE SURFACE FOR APPLICATION OF NEW FINISHES. THERE MAY BE FURRING OR SLEEPERS WITH ADDITIONAL LAYER OF FLOOR FINISH BELOW EXISTING CARPET.
10. THE PLUMBING CONTRACTOR IS RESPONSIBLE FOR SAW CUTTING ANY CONCRETE FOR NEW PLUMBING AND REPAIRING THE FLOOR AFTERWARD.
11. ALL PIPING AND CONDUIT SHALL BE CAPPED BELOW FLOOR SURFACES OR INSIDE WALLS. GENERAL CONTRACTOR SHALL PATCH ALL EXPOSED AREAS TO PROVIDE SMOOTH LEVEL SURFACES WITH NO PROTRUSIONS.
12. EXISTING WORK TO REMAIN SHALL BE PROTECTED FROM DAMAGE DURING DEMOLITION. GENERAL CONTRACTOR IS RESPONSIBLE FOR PROTECTING WORK TO MAINTAIN THE CONDITION IN WHICH IT WAS FOUND.
13. REMOVE ALL EXISTING WINDOW BLINDS, UNLESS OTHERWISE NOTED.
14. NOISE AND DEBRIS FROM DEMOLITION WORK MUST BE CONTROLLED. TEMPORARY BARRIERS MUST BE INSTALLED TO COMPLETELY ISOLATE THE NOISE, DUST, AND DEBRIS FROM DEMOLITION ACTIVITIES TO PREVENT THEM FROM AFFECTING OCCUPIED AREAS.
15. FIRE EXTINGUISHERS TO BE SALVAGED FROM DEMOLISHED CABINETS AND HANGERS AS NOTED AND REINSTALLED. PROTECT DURING WORK.

HUFFMAN ARCHITECTS
632 PERSHING ROAD
RALEIGH, NORTH CAROLINA 27608
P 919.417.3788
WWW.HUFFMANARCH.COM

WCOB - MEZZANINE AND SECOND FLOOR UP-FIT

PROJECT LOCATION
337 S. SALISBURY ST.
RALEIGH, NC 27601

CONSULTANTS

MECHANICAL, ELECTRICAL, AND PLUMBING
HDM ASSOCIATES
106 TARHEEL COURT
ELIZABETH CITY, NC 27909
252.698.3003 T

STRUCTURAL
LYSAGHT & ASSOCIATES
120 ST. MARY'S STREET
RALEIGH, NC 27605
919.833.0495 T

WAKE COUNTY
NORTH CAROLINA

SEALS

Huffman Architects PA CORPORATE 52498 NORTH CAROLINA

ERIC M. SOWERS REGISTERED ARCHITECT 9314 NORTH CAROLINA RALEIGH, N.C.

10/06/2022

PROJECT INFORMATION

PROJECT NO.:	2127
PHASE:	BID/PERMIT SET
DATE:	10.06.2022
DRAWN BY:	TC
CHECKED BY:	EMS

REVISIONS

NO.	DESCRIPTION	DATE
1	ADDENDUM NO 2	10/27/2022

SHEET INFORMATION

D101

MEZZANINE - DEMOLITION PLAN

SECOND FLOOR - DEMOLITION

1 D102 — 1/8" = 1'-0"

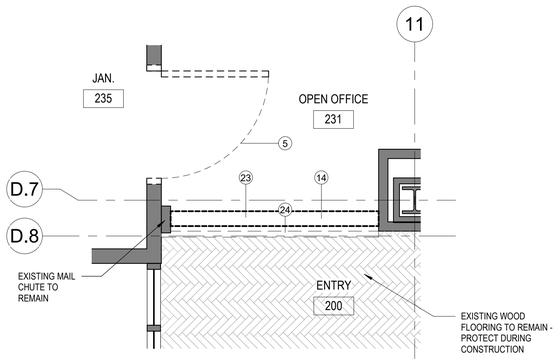

SECOND FLOOR - ENLARGED ENTRY

2 D102 — 1/2" = 1'-0"

PLAN LEGEND

EXISTING WALLS	AREA OF NO WORK
DEMOLISHED WALLS	SHAFT (OPEN TO BELOW)
DEMOLISHED	FIRE EXTINGUISHER AND HOSE VALVE CABINET (SEMI-RECESSED TYPE) — FEHC
BEYOND	
UNRATED CONSTRUCTION	FIRE EXTINGUISHER CABINET (SEMI-RECESSED TYPE) — FEC
UNRATED CONSTRUCTION (TEMPORARY)	
2-HR FIRE BARRIER (EXISTING)	FIRE EXTINGUISHER — FE
2-HR FIRE BARRIER (NEW)	WALL-MOUNTED DISPLAY (NIC)

NOTES

1. ALL DIMENSIONS ARE TO FINISHED FACE OF WALL.
2. COORDINATE AND PROVIDE BACKING/BLOCKING FOR MILLWORK AND ITEMS ATTACHED OR MOUNTED TO WALLS OR CEILINGS.
3. LOCATE DOOR OPENINGS 3" OFF PERPENDICULAR WALL, UON.
4. FINISH WALL TO FLOOR FOR BASE ADHESION.
5. THE GENERAL CONTRACTOR SHALL FIELD VERIFY ALL DIMENSIONS AND CONDITIONS.

(#) DEMOLITION KEY NOTES

KEY	DESCRIPTION
1	DEMOLISH EXISTING PARTITION WALL AS NEEDED FOR NEW CONSTRUCTION
2	DEMOLISH EXISTING TERRACOTTA TILE - DEMOLISH AT COLUMN ON ALL SIDES
3	DEMOLISH EXISTING RAISED FLOOR TO EXISTING SLAB BELOW AS NEEDED FOR NEW STAIR - SEE STRUCTURAL
4	DEMOLISH EXISTING FRAME - DEMOLISH EXISTING WALL AS REQUIRED FOR NEW ROUGH OPENING
5	DEMOLISH EXISTING DOOR AND FRAME - DEMOLISH EXISTING WALL AS REQUIRED FOR NEW ROUGH OPENING
6	DEMOLISH EXISTING DOOR, FRAME, AND SIDELITES - DEMOLISH EXISTING WALL AS REQUIRED FOR NEW ROUGH OPENING
8	DEMOLISH EXISTING CHAIR RAIL (ALL LOCATIONS THIS ROOM)
9	REMOVE AND DISPOSE EXISTING WALL COVERING - PATCH AND PREP EXISTING WALL TO RECEIVE NEW PAINT FINISH AND DEVICES AS APPLICABLE (ALL WALLS TO REMAIN IN THE WORK AREA)
10	PATCH AND PREP EXISTING WALL TO RECEIVE NEW PAINT FINISH AND DEVICES AS APPLICABLE (ALL LOCATIONS THIS ROOM)
11	DEMOLISH EXISTING WINDOW BLINDS
12	DEMOLISH EXISTING VCT FLOORING AND ASSOCIATED BASE (ALL LOCATIONS THIS ROOM)
13	DEMOLISH EXISTING CERAMIC TILE FLOORING AND ASSOCIATED BASE (ALL LOCATIONS THIS ROOM)
14	DEMOLISH EXISTING CARPET TILE AND ASSOCIATED BASE AS NEEDED FOR NEW CONSTRUCTION - SALVAGE FOR REUSE IN WORK AREAS ON SECOND FLOOR WHERE CARPET TILE IS DEMOLISHED
15	DEMOLISH EXISTING FIRE EXTINGUISHER CABINET, SALVAGE FIRE EXTINGUISHER FOR REUSE - DEMOLISH WALL AS NEEDED FOR NEW CABINET

(#) DEMOLITION KEY NOTES

KEY	DESCRIPTION
16	DEMOLISH EXISTING FIRE EXTINGUISHER AND HOSE VALVE CABINET, SALVAGE FIRE EXTINGUISHER FOR REUSE
17	DEMOLISH EXISTING FIRE EXTINGUISHER MOUNTING HARDWARE, SALVAGE FIRE EXTINGUISHER FOR REUSE - DEMOLISH WALL AS NEEDED FOR NEW CABINET
18	DEMOLISH EXISTING FIRE EXTINGUISHER MOUNTING HARDWARE, SALVAGE FIRE EXTINGUISHER FOR REUSE
19	DEMOLISH ALUMINUM STAIR, CARPET TREAD, HANDRAILS, AND ASSOCIATED HARDWARE TO EXISTING SLAB BELOW; PREPARE SLAB TO RECEIVE NEW STAIRS/FLOOR FINISH - SEE STRUCTURAL
20	DEMOLISH ALUMINUM RAMP, RAMP FINISH, HANDRAILS, AND ASSOCIATED HARDWARE TO EXISTING SLAB BELOW; PREPARE SLAB TO RECEIVE NEW RAMP/FLOOR FINISH - SEE STRUCTURAL
21	DEMOLISH EXISTING ACT CEILING (TILES AND GRID) AS REQUIRED FOR NEW WALL
22	DEMOLISH EXISTING ACT CEILING (TILE ONLY - GRID TO REMAIN)
23	DEMOLISH EXISTING GWB CEILING
24	DEMOLISH EXISTING WOOD TRANSITION STRIP
25	REMOVE EXISTING DOOR, HARDWARE, FRAME, AND CARD READER TO BE INSTALLED IN THE TEMPORARY WALL AT DATA CENTER IM2
26	DEMOLISH EXISTING DOOR AND FRAME AND PATCH WALL
27	DEMOLISH EXISTING WALL AS REQUIRED FOR NEW DOOR AND FRAME

DEMOLITION GENERAL NOTES

1. SEE PME DRAWINGS FOR MORE SPECIFIC HVAC, ELECTRICAL, AND PLUMBING DEMOLITION NOTES.
2. GENERAL CONTRACTOR IS RESPONSIBLE FOR ALL GENERAL CONSTRUCTION DEMOLITION. MECHANICAL CONTRACTOR IS RESPONSIBLE FOR MECHANICAL DEMOLITION. PLUMBING CONTRACTOR IS RESPONSIBLE FOR PLUMBING DEMOLITION. ELECTRICAL CONTRACTOR IS RESPONSIBLE FOR ELECTRICAL DEMOLITION. UNLESS OTHERWISE NOTED.
3. ALL TRENCHING, CORING, ETC. IS TO BE DONE BY THE CONTRACTOR OF THE RESPECTIVE TRADE INVOLVED. EACH PRIME CONTRACTOR IS RESPONSIBLE FOR THEIR OWN FIRE PENETRATION SYSTEMS, FOR NEW PENETRATIONS, AND FOR PATCHING ANY NEW HOLES MADE.
4. THE TERM "REMOVED" SHALL BE DEFINED TO MEAN REMOVE AND DISPOSE OF OFFSITE IN A LEGAL, ENVIRONMENTALLY RESPONSIBLE MANNER.
5. WHERE WALLS, FLOORS, EQUIPMENT, ETC. ARE NOTED AS BEING REMOVED AND THIS CREATES VOID OR DAMAGE IN EXISTING WALLS OR FLOORS, CONTRACTOR IS RESPONSIBLE FOR REPAIRING WALL OR FLOOR WITH SIMILAR MATERIALS AND FINISHES AS ADJACENT CONSTRUCTION AS REQUIRED TO RESTORE FIRE RATINGS AND RECEIVE NEW FINISHES AS INDICATED ON FINISH PLANS.
6. EACH CONTRACTOR IS RESPONSIBLE FOR RELOCATING OR REPLACING THEIR UTILITIES LOCATED WITHIN EXISTING CONSTRUCTION THAT SHALL BE REMOVED. (I.E. PLUMBING CONTRACTOR IS RESPONSIBLE FOR RELOCATING PLUMBING VENTS AND ELECTRICAL CONTRACTOR IS RESPONSIBLE FOR RELOCATING DEVICES, RACEWAY, CONDUIT, ETC.)
7. REMOVE EXISTING ACT CEILING AS NOTED ON PLANS. EXISTING PLASTER SUB-CEILING TO REMAIN AND BE PATCHED TO MAINTAIN FIRE RATING.
8. LEAVE FLOORS, CEILINGS, AND OTHER WALLS WITH A SMOOTH AND FINISHED APPEARANCE WHERE WALLS HAVE BEEN REMOVED.
9. REMOVE EXISTING FLOOR FINISH AS OCCURS DOWN TO EXISTING TERRAZZO FLOOR OR SLAB WITHIN WORK AREA. PREPARE SURFACE FOR APPLICATION OF NEW FINISHES. THERE MAY BE FURRING OR SLEEPERS WITH ADDITIONAL LAYER OF FLOOR FINISH BELOW EXISTING CARPET.
10. THE PLUMBING CONTRACTOR IS RESPONSIBLE FOR SAW CUTTING ANY CONCRETE FOR NEW PLUMBING AND REPAIRING THE FLOOR AFTERWARD.
11. ALL PIPING AND CONDUIT SHALL BE CAPPED BELOW FLOOR SURFACES OR INSIDE WALLS. GENERAL CONTRACTOR SHALL PATCH ALL EXPOSED AREAS TO PROVIDE SMOOTH LEVEL SURFACES WITH NO PROTRUSIONS.
12. EXISTING WORK TO REMAIN SHALL BE PROTECTED FROM DAMAGE DURING DEMOLITION. GENERAL CONTRACTOR IS RESPONSIBLE FOR PROTECTING WORK TO MAINTAIN THE CONDITION IN WHICH IT WAS FOUND.
13. REMOVE ALL EXISTING WINDOW BLINDS, UNLESS OTHERWISE NOTED.
14. NOISE AND DEBRIS FROM DEMOLITION WORK MUST BE CONTROLLED. TEMPORARY BARRIERS MUST BE INSTALLED TO COMPLETELY ISOLATE THE NOISE, DUST, AND DEBRIS FROM DEMOLITION ACTIVITIES TO PREVENT THEM FROM AFFECTING OCCUPIED AREAS.
15. FIRE EXTINGUISHERS TO BE SALVAGED FROM DEMOLISHED CABINETS AND HANGERS AS NOTED AND REINSTALLED. PROTECT DURING WORK.

HUFFMAN ARCHITECTS
632 PERSHING ROAD
RALEIGH, NORTH CAROLINA 27608
P 919.417.3788
WWW.HUFFMANARCH.COM

WCOB - MEZZANINE AND SECOND FLOOR UP-FIT

PROJECT LOCATION
337 S. SALISBURY ST.
RALEIGH, NC 27601

CONSULTANTS

MECHANICAL, ELECTRICAL, AND PLUMBING
HDM ASSOCIATES
106 TARHEEL COURT
ELIZABETH CITY, NC 27909
252.698.3003 T

STRUCTURAL
LYSAGHT & ASSOCIATES
120 ST. MARY'S STREET
RALEIGH, NC 27605
919.833.0495 T

WAKE COUNTY
NORTH CAROLINA

SEALS

Huffman Architects PLLC CORPORATE 52498 NORTH CAROLINA

ERIC M. SOWERS REGISTERED ARCHITECT 9314 NORTH CAROLINA RALEIGH, N.C.
10/06/2022

PROJECT INFORMATION

PROJECT NO.:	2127
PHASE:	BID/PERMIT SET
DATE:	10.06.2022
DRAWN BY:	TC
CHECKED BY:	EMS

REVISIONS

NO.	DESCRIPTION	DATE
1	ADDENDUM NO 2	10/27/2022

SHEET INFORMATION

D102

SECOND FLOOR - DEMOLITION PLAN

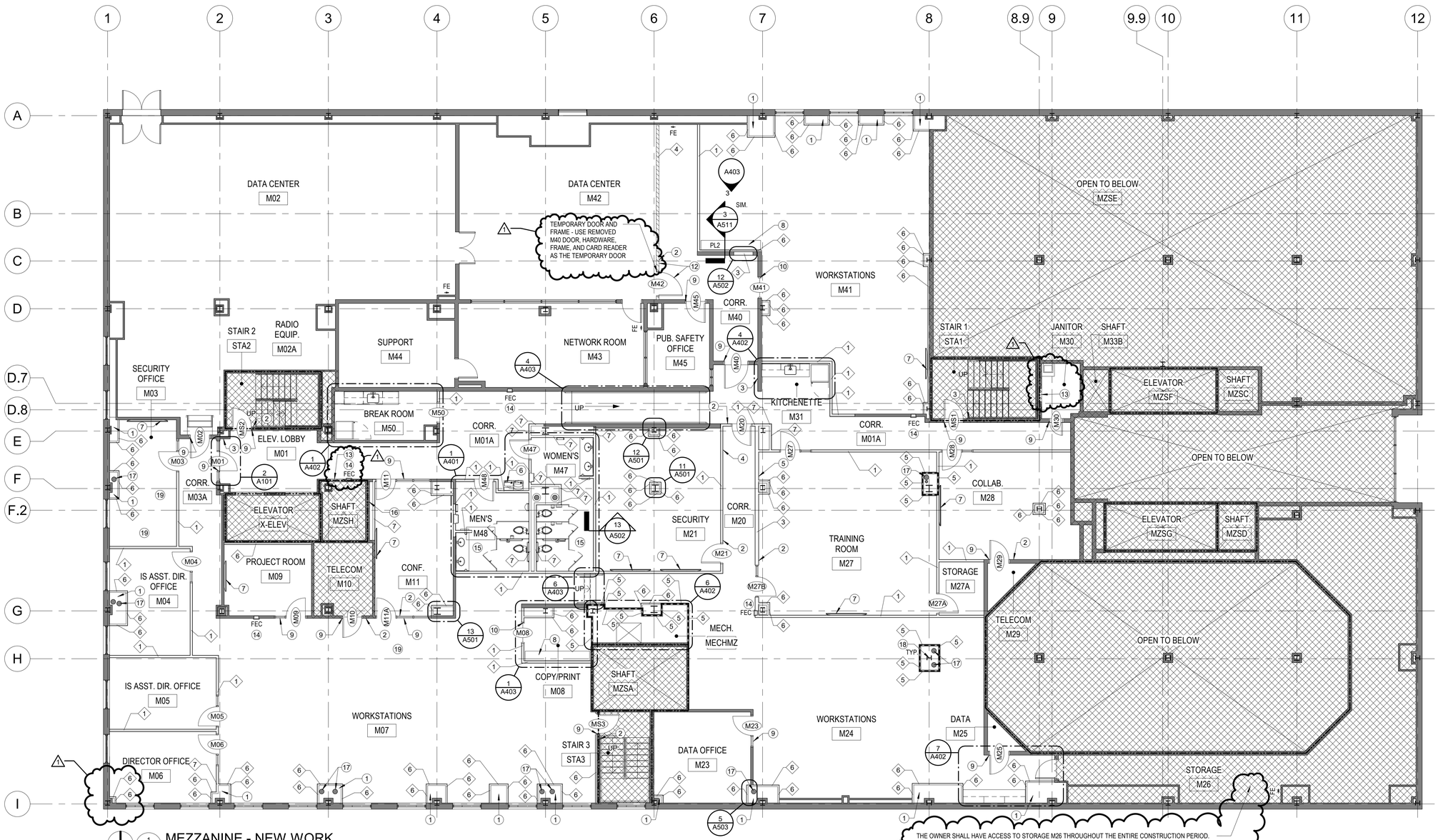

1 A101 MEZZANINE - NEW WORK
1/8" = 1'-0"

PLAN LEGEND

- EXISTING WALLS
- DEMOLISHED WALLS
- DEMOLISHED
- BEYOND
- UNRATED CONSTRUCTION
- UNRATED CONSTRUCTION (TEMPORARY)
- 2-HR FIRE BARRIER (EXISTING)
- 2-HR FIRE BARRIER (NEW)
- AREA OF NO WORK
- SHAFT (OPEN TO BELOW)
- FEHC — FIRE EXTINGUISHER AND HOSE VALVE CABINET (SEMI-RECESSED TYPE)
- FEC — FIRE EXTINGUISHER CABINET (SEMI-RECESSED TYPE)
- FE — FIRE EXTINGUISHER
- WALL-MOUNTED DISPLAY (NIC)

NOTES

1. ALL DIMENSIONS ARE TO FINISHED FACE OF WALL.
2. COORDINATE AND PROVIDE BACKING/BLOCKING FOR MILLWORK AND ITEMS ATTACHED OR MOUNTED TO WALLS OR CEILINGS.
3. LOCATE DOOR OPENINGS 3" OFF PERPENDICULAR WALL, UON.
4. FINISH WALL TO FLOOR FOR BASE ADHESION.
5. THE GENERAL CONTRACTOR SHALL FIELD VERIFY ALL DIMENSIONS AND CONDITIONS.

WALL SCHEDULE

TYPE	THICKNESS	COMPOSITION	HEIGHT	RATING	COMMENTS
1	4 7/8"	1 LAYER 5/8" GWB, 3 5/8" METAL STUDS @ 16" O.C. W/ SOUND BATTS, 1 LAYER 5/8" GWB	TO DECK	NONE	SOUND-INSULATED
2	4 7/8"	1 LAYER 5/8" GWB, 3 5/8" METAL STUDS @ 16" O.C. W/ SOUND BATTS, 1 LAYER 5/8" GWB	TO DECK/TO EXISTING GWB CEILING (SEE A112)	NONE	SOUND-INSULATED
3	7 1/4"	1 LAYER 5/8" GWB, 6" METAL STUDS @ 16" O.C. W/ SOUND BATTS, 1 LAYER 5/8" GWB	TO DECK	NONE	SOUND-INSULATED
4	4 7/8"	1 LAYER 5/8" GWB, 3 5/8" METAL STUDS @ 16" O.C., 1 LAYER 5/8" GWB	TO DECK	NONE	TEMPORARY WALL
5	3 3/4"	2 LAYERS 5/8" TYPE X GWB, 2 1/2" CH STUDS @ 24" O.C. W/ 1 1/2" BATT INSULATION, 1 LAYER 1" TYPE X GWB LINER PANEL	TO DECK	2-HR	
6	3 1/8"	1 LAYER 5/8" GWB, 2 1/2" METAL STUDS @ 16" O.C.	TO 6" ABOVE CEILING	NONE	
7	4 1/4"	1 LAYER 5/8" GWB, 3 5/8" METAL STUDS @ 16" O.C.	TO 6" ABOVE CEILING	NONE	

GENERAL KEY NOTES

KEY	DESCRIPTION
1	MAINTAIN 2 HOUR FLOOR RATING AT EXISTING PIPING/DUCT OPENING, TYPICAL ALL COLUMN & PIPE ENCLOSURES AT PERIMETER WALL AND WHERE NOTED - ENSURE RATING IS MAINTAINED AT BOTH FLOOR SLAB & OVERHEAD SLABS (TYPICAL) NOT ALL PIPES ARE SHOWN
2	CARD READER LOCATION - SEE PME; COORDINATE WITH ELECTRICAL AND SECURITY VENDOR
3	EXISTING CARD READER TO BE SALVAGED FOR REUSE; TIE INTO NEW DOOR & FRAME - SEE ELECTRICAL
4	PROVIDE DURESS BUTTON (RECESSED INTO WALL) - SEE ELECTRICAL
5	PROVIDE LOCAL RECEPTION CONTROL BUTTON (RECESSED INTO WALL) - SEE ELECTRICAL
6	ELECTRICAL WATER COOLER W/ WATER BOTTLE FILLER (HI/LOW UNIT)
7	WALL MOUNTED MONITOR/LCD TV (NIC) - COORDINATE POWER/DATA LOCATIONS WITH MONITOR/TV AND PROVIDE BLOCKING AS REQUIRED - SEE ELECTRICAL
8	OPEN SHELVING (SEE A403 AND A511)
9	PROVIDE NEW DOOR/DOOR FRAME IN EXISTING WALL - VERIFY WALL THICKNESS SO THAT FRAME HAS APPROPRIATE THROAT DEPTH - PATCH WALL AS REQUIRED FOR PAINT
10	PROVIDE NEW HOLLOW METAL FRAMED OPENING IN EXISTING WALL - VERIFY WALL THICKNESS SO THAT FRAME HAS APPROPRIATE THROAT DEPTH
11	NEW WOOD TRANSITION STRIP - MATCH EXISTING WOOD COLOR/FINISH
12	TEMPORARY WALL AND DOOR
13	PATCH WALL TO MEET REQUIRED RATING AND PROVIDE NEW FINISHES WHERE THE HOSE VALVE CABINET HAS BEEN REMOVED
14	PROVIDE NEW SEMI-RECESSED FIRE EXTINGUISHER AND CABINET
15	INSTALL GYPSUM BOARD UNITS ON ALL WALLS TO RECEIVE TILE
16	REMOVE AND REPLACE SHAFT WALL AS REQUIRED FOR NEW CONSTRUCITON - MAINTAIN 2-HOUR RATING
17	EXISTING METAL PIPE TO BE WRAPPED IN 3M FIRE BARRIER DUCT WRAP 615+ TO ACHIEVE A 2-HOUR RATING - TYPICAL ALL LOCATIONS
18	PROVIDE SFRM TO EXPOSED COLUMNS TO ACHIEVE A 2-HOUR RATING PER UL X717, TYPICAL ALL LOCATIONS
19	PATCH SLAB PENETRATION AT THIS LOCATION, PREPARE FOR FLOOR FINISH

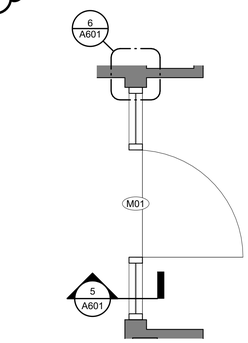

2 A101 ENLARGED DOOR M01
1/2" = 1'-0"

HUFFMAN ARCHITECTS
632 PERSHING ROAD
RALEIGH, NORTH CAROLINA 27608
P 919.417.3788
WWW.HUFFMANARCH.COM

WCOB - MEZZANINE AND SECOND FLOOR UP-FIT

PROJECT LOCATION
337 S. SALISBURY ST.
RALEIGH, NC 27601

CONSULTANTS

MECHANICAL, ELECTRICAL, AND PLUMBING
HDM ASSOCIATES
106 TARHEEL COURT
ELIZABETH CITY, NC 27909
252.698.3003 T

STRUCTURAL
LYSAGHT & ASSOCIATES
120 ST. MARY'S STREET
RALEIGH, NC 27605
919.833.0495 T

WAKE COUNTY
NORTH CAROLINA

SEALS

Hufman Architects CORPORATE 52498 NORTH CAROLINA

ERIC M. SOWERS REGISTERED ARCHITECT 9314 NORTH CAROLINA RALEIGH, N.C.
10/06/2022

PROJECT INFORMATION

PROJECT NO.:	2127
PHASE:	BID/PERMIT SET
DATE:	10.06.2022
DRAWN BY:	TC
CHECKED BY:	EMS

REVISIONS

NO.	DESCRIPTION	DATE
1	ADDENDUM NO 2	10/27/2022

SHEET INFORMATION

A101
MEZZANINE - FLOOR PLAN

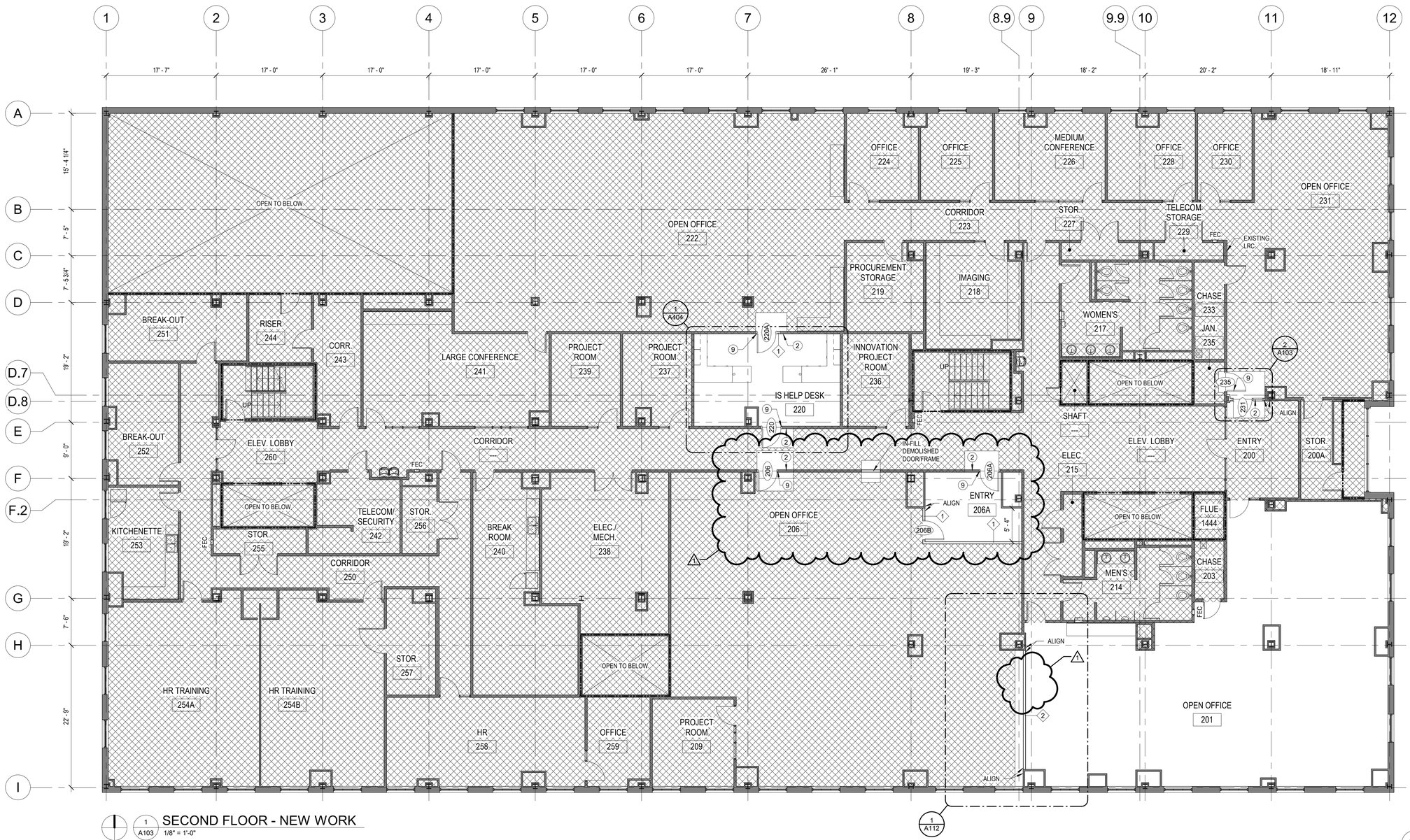

1 A103 SECOND FLOOR - NEW WORK
1/8" = 1'-0"

PLAN LEGEND

- EXISTING WALLS
- DEMOLISHED WALLS
- DEMOLISHED
- BEYOND
- UNRATED CONSTRUCTION
- UNRATED CONSTRUCTION (TEMPORARY)
- 2-HR FIRE BARRIER (EXISTING)
- 2-HR FIRE BARRIER (NEW)
- AREA OF NO WORK
- SHAFT (OPEN TO BELOW)
- FEHC — FIRE EXTINGUISHER AND HOSE VALVE CABINET (SEMI-RECESSED TYPE)
- FEC — FIRE EXTINGUISHER CABINET (SEMI-RECESSED TYPE)
- FE — FIRE EXTINGUISHER
- WALL-MOUNTED DISPLAY (NIC)

NOTES

1. ALL DIMENSIONS ARE TO FINISHED FACE OF WALL.
2. COORDINATE AND PROVIDE BACKING/BLOCKING FOR MILLWORK AND ITEMS ATTACHED OR MOUNTED TO WALLS OR CEILINGS.
3. LOCATE DOOR OPENINGS 3" OFF PERPENDICULAR WALL, UON.
4. FINISH WALL TO FLOOR FOR BASE ADHESION.
5. THE GENERAL CONTRACTOR SHALL FIELD VERIFY ALL DIMENSIONS AND CONDITIONS.

WALL SCHEDULE

TYPE	THICKNESS	COMPOSITION	HEIGHT	RATING	COMMENTS
1	4 7/8"	1 LAYER 5/8" GWB, 3 5/8" METAL STUDS @ 16" O.C. W/ SOUND BATTS, 1 LAYER 5/8" GWB	TO DECK	NONE	SOUND-INSULATED
2	4 7/8"	1 LAYER 5/8" GWB, 3 5/8" METAL STUDS @ 16" O.C. W/ SOUND BATTS, 1 LAYER 5/8" GWB	TO DECK/TO EXISTING GWB CEILING (SEE A112)	NONE	SOUND-INSULATED
3	7 1/4"	1 LAYER 5/8" GWB, 6" METAL STUDS @ 16" O.C. W/ SOUND BATTS, 1 LAYER 5/8" GWB	TO DECK	NONE	SOUND-INSULATED
4	4 7/8"	1 LAYER 5/8" GWB, 3 5/8" METAL STUDS @ 16" O.C., 1 LAYER 5/8" GWB	TO DECK	NONE	TEMPORARY WALL
5	3 3/4"	2 LAYERS 5/8" TYPE X GWB, 2 1/2" CH STUDS @ 24" O.C. W/ 1 1/2" BATT INSULATION, 1 LAYER 1" TYPE X GWB LINER PANEL	TO DECK	2-HR	
6	3 1/8"	1 LAYER 5/8" GWB, 2 1/2" METAL STUDS @ 16" O.C.	TO 6" ABOVE CEILING	NONE	
7	4 1/4"	1 LAYER 5/8" GWB, 3 5/8" METAL STUDS @ 16" O.C.	TO 6" ABOVE CEILING	NONE	

GENERAL KEY NOTES

KEY	DESCRIPTION
1	MAINTAIN 2 HOUR FLOOR RATING AT EXISTING PIPING/DUCT OPENING, TYPICAL ALL COLUMN & PIPE ENCLOSURES AT PERIMETER WALL AND WHERE NOTED - ENSURE RATING IS MAINTAINED AT BOTH FLOOR SLAB & OVERHEAD SLABS (TYPICAL) NOT ALL PIPES ARE SHOWN
2	CARD READER LOCATION - SEE PME; COORDINATE WITH ELECTRICAL AND SECURITY VENDOR
3	EXISTING CARD READER TO BE SALVAGED FOR REUSE; TIE INTO NEW DOOR & FRAME - SEE ELECTRICAL
4	PROVIDE DURESS BUTTON (RECESSED INTO WALL) - SEE ELECTRICAL
5	PROVIDE LOCAL RECEPTION CONTROL BUTTON (RECESSED INTO WALL) - SEE ELECTRICAL
6	ELECTRICAL WATER COOLER W/ WATER BOTTLE FILLER (HI/LOW UNIT)
7	WALL MOUNTED MONITOR/LCD TV (NIC) - COORDINATE POWER/DATA LOCATIONS WITH MONITOR/TV AND PROVIDE BLOCKING AS REQUIRED - SEE ELECTRICAL
8	OPEN SHELVING (SEE A403 AND A511)
9	PROVIDE NEW DOOR/DOOR FRAME IN EXISTING WALL - VERIFY WALL THICKNESS SO THAT FRAME HAS APPROPRIATE THROAT DEPTH - PATCH WALL AS REQUIRED FOR PAINT
10	PROVIDE NEW HOLLOW METAL FRAMED OPENING IN EXISTING WALL - VERIFY WALL THICKNESS SO THAT FRAME HAS APPROPRIATE THROAT DEPTH
11	NEW WOOD TRANSITION STRIP - MATCH EXISTING WOOD COLOR/FINISH
12	TEMPORARY WALL AND DOOR
13	PATCH WALL TO MEET REQUIRED RATING AND PROVIDE NEW FINISHES WHERE THE HOSE VALVE CABINET HAS BEEN REMOVED
14	PROVIDE NEW SEMI-RECESSED FIRE EXTINGUISHER AND CABINET
15	INSTALL 5/8" CEMENTITIOUS BACKER UNITS ON ALL WALLS TO RECEIVE TILE
16	REMOVE AND REPLACE SHAFT WALL AS REQUIRED FOR NEW CONSTRUCITON - MAINTAIN 2-HOUR RATING
17	EXISTING METAL PIPE TO BE WRAPPED IN 3M FIRE BARRIER DUCT WRAP 615+ TO ACHIEVE A 2-HOUR RATING - TYPICAL ALL LOCATIONS
18	PROVIDE SFRM TO EXPOSED COLUMNS TO ACHIEVE A 2-HOUR RATING PER UL X717, TYPICAL ALL LOCATIONS
19	PATCH SLAB PENETRATION AT THIS LOCATION, PREPARE FOR FLOOR FINISH

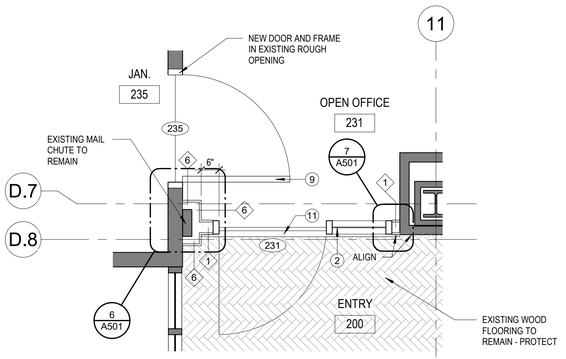

2 A103 SECOND FLOOR - ENLARGED DOOR 231
1/2" = 1'-0"

HUFFMAN ARCHITECTS
632 PERSHING ROAD
RALEIGH, NORTH CAROLINA 27608
P 919.417.3788
WWW.HUFFMANARCH.COM

WCOB - MEZZANINE AND SECOND FLOOR UP-FIT

PROJECT LOCATION
337 S. SALISBURY ST.
RALEIGH, NC 27601

CONSULTANTS

MECHANICAL, ELECTRICAL, AND PLUMBING
HDM ASSOCIATES
106 TARHEEL COURT
ELIZABETH CITY, NC 27909
252.698.3003 T

STRUCTURAL
LYSAGHT & ASSOCIATES
120 ST. MARY'S STREET
RALEIGH, NC 27605
919.833.0495 T

WAKE COUNTY
NORTH CAROLINA

SEALS

Huffman Architects, P.A. 52498 NORTH CAROLINA REGISTERED ARCHITECTURE

ERIC M. SOWERS 9314 NORTH CAROLINA REGISTERED ARCHITECT RALEIGH, N.C.

10/06/2022

PROJECT INFORMATION

PROJECT NO.:	2127
PHASE:	BID/PERMIT SET
DATE:	10.06.2022
DRAWN BY:	TC
CHECKED BY:	EMS

REVISIONS

NO.	DESCRIPTION	DATE
1	ADDENDUM NO 2	10/27/2022

SHEET INFORMATION

A103

SECOND FLOOR - FLOOR PLAN

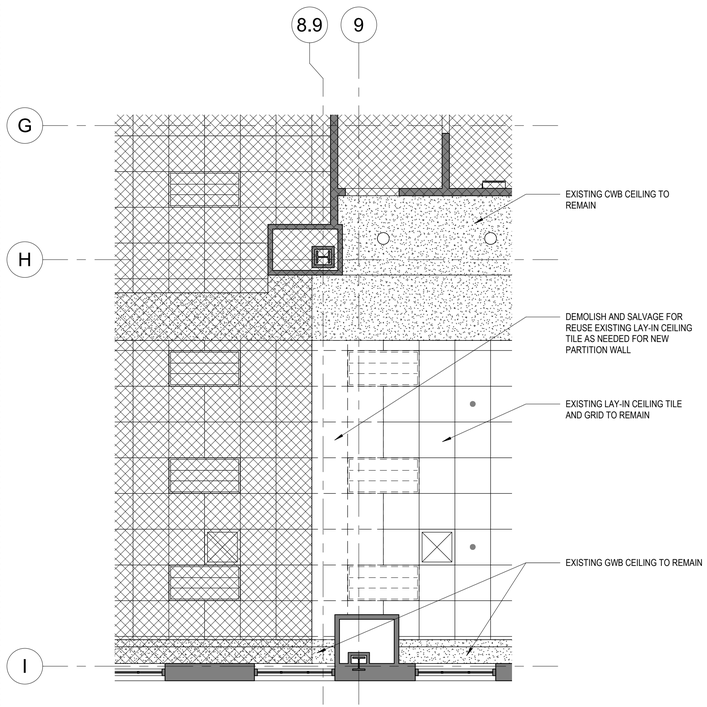

1 A112 SECOND FLOOR - DEMOLITION RCP
1/4" = 1'-0"

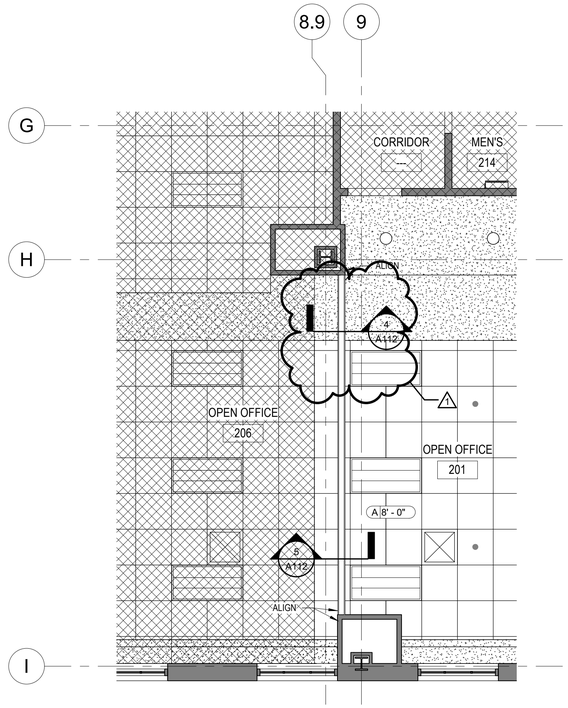

2 A112 SECOND FLOOR - NEW WORK RCP
1/4" = 1'-0"

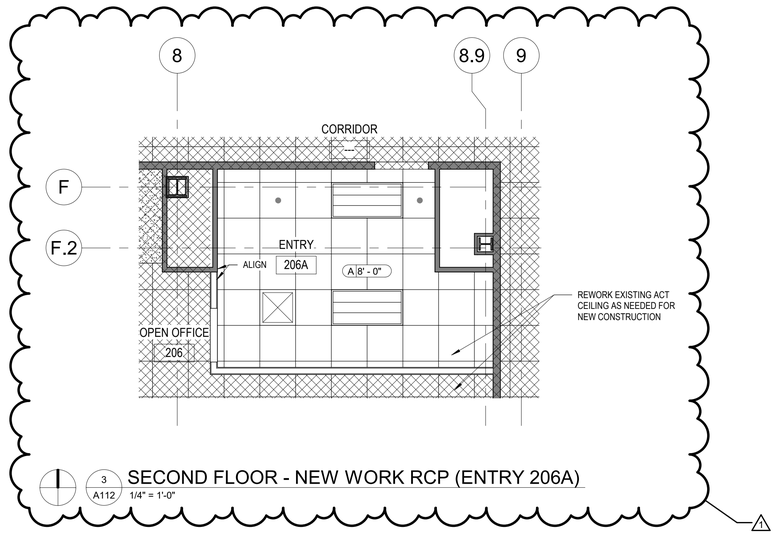

3 A112 SECOND FLOOR - NEW WORK RCP (ENTRY 206A)
1/4" = 1'-0"

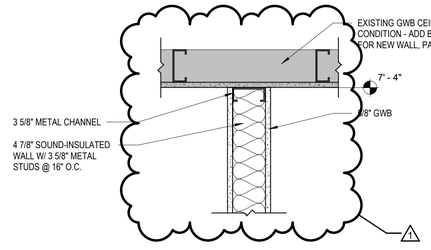

4 A112 SECTION AT OFFICE 201 CEILING
1 1/2" = 1'-0"

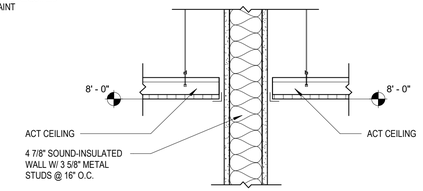

5 A112 SECTION AT OFFICE 201 PARTITION
1 1/2" = 1'-0"

PLAN LEGEND

- EXISTING WALLS
- DEMOLISHED WALLS
- DEMOLISHED
- BEYOND
- UNRATED CONSTRUCTION
- UNRATED CONSTRUCTION (TEMPORARY)
- 2-HR FIRE BARRIER (EXISTING)
- 2-HR FIRE BARRIER (NEW)
- AREA OF NO WORK
- SHAFT (OPEN TO BELOW)
- FEHC — FIRE EXTINGUISHER AND HOSE VALVE CABINET (SEMI-RECESSED TYPE)
- FEC — FIRE EXTINGUISHER CABINET (SEMI-RECESSED TYPE)
- FE — FIRE EXTINGUISHER
- WALL-MOUNTED DISPLAY (NIC)

NOTES

1. ALL DIMENSIONS ARE TO FINISHED FACE OF WALL.
2. COORDINATE AND PROVIDE BACKING/BLOCKING FOR MILLWORK AND ITEMS ATTACHED OR MOUNTED TO WALLS OR CEILINGS.
3. LOCATE DOOR OPENINGS 3" OFF PERPENDICULAR WALL, UON.
4. FINISH WALL TO FLOOR FOR BASE ADHESION.
5. THE GENERAL CONTRACTOR SHALL FIELD VERIFY ALL DIMENSIONS AND CONDITIONS.

DEMOLITION KEY NOTES

KEY	DESCRIPTION
1	DEMOLISH EXISTING PARTITION WALL AS NEEDED FOR NEW CONSTRUCTION
2	DEMOLISH EXISTING TERRACOTTA TILE - DEMOLISH AT COLUMN ON ALL SIDES
3	DEMOLISH EXISTING RAISED FLOOR TO EXISTING SLAB BELOW AS NEEDED FOR NEW STAIR - SEE STRUCTURAL
4	DEMOLISH EXISTING FRAME - DEMOLISH EXISTING WALL AS REQUIRED FOR NEW ROUGH OPENING
5	DEMOLISH EXISTING DOOR AND FRAME - DEMOLISH EXISTING WALL AS REQUIRED FOR NEW ROUGH OPENING
6	DEMOLISH EXISTING DOOR, FRAME, AND SIDELITES - DEMOLISH EXISTING WALL AS REQUIRED FOR NEW ROUGH OPENING
8	DEMOLISH EXISTING CHAIR RAIL (ALL LOCATIONS THIS ROOM)
9	REMOVE AND DISPOSE EXISTING WALL COVERING - PATCH AND PREP EXISTING WALL TO RECEIVE NEW PAINT FINISH AND DEVICES AS APPLICABLE (ALL WALLS TO REMAIN IN THE WORK AREA)
10	PATCH AND PREP EXISTING WALL TO RECEIVE NEW PAINT FINISH AND DEVICES AS APPLICABLE (ALL LOCATIONS THIS ROOM)
11	DEMOLISH EXISTING WINDOW BLINDS
12	DEMOLISH EXISTING VCT FLOORING AND ASSOCIATED BASE (ALL LOCATIONS THIS ROOM)
13	DEMOLISH EXISTING CERAMIC TILE FLOORING AND ASSOCIATED BASE (ALL LOCATIONS THIS ROOM)
14	DEMOLISH EXISTING CARPET TILE AND ASSOCIATED BASE AS NEEDED FOR NEW CONSTRUCTION - SALVAGE FOR REUSE IN WORK AREAS ON SECOND FLOOR WHERE CARPET TILE IS DEMOLISHED
15	DEMOLISH EXISTING FIRE EXTINGUISHER CABINET, SALVAGE FIRE EXTINGUISHER FOR REUSE - DEMOLISH WALL AS NEEDED FOR NEW CABINET

DEMOLITION KEY NOTES

KEY	DESCRIPTION
16	DEMOLISH EXISTING FIRE EXTINGUISHER AND HOSE VALVE CABINET, SALVAGE FIRE EXTINGUISHER FOR REUSE
17	DEMOLISH EXISTING FIRE EXTINGUISHER MOUNTING HARDWARE, SALVAGE FIRE EXTINGUISHER FOR REUSE - DEMOLISH WALL AS NEEDED FOR NEW CABINET
18	DEMOLISH EXISTING FIRE EXTINGUISHER MOUNTING HARDWARE, SALVAGE FIRE EXTINGUISHER FOR REUSE
19	DEMOLISH ALUMINUM STAIR, CARPET TREAD, HANDRAILS, AND ASSOCIATED HARDWARE TO EXISTING SLAB BELOW; PREPARE SLAB TO RECEIVE NEW STAIRS/FLOOR FINISH - SEE STRUCTURAL
20	DEMOLISH ALUMINUM RAMP, RAMP FINISH, HANDRAILS, AND ASSOCIATED HARDWARE TO EXISTING SLAB BELOW; PREPARE SLAB TO RECEIVE NEW RAMP/FLOOR FINISH - SEE STRUCTURAL
21	DEMOLISH EXISTING ACT CEILING (TILES AND GRID) AS REQUIRED FOR NEW WALL
22	DEMOLISH EXISTING ACT CEILING (TILE ONLY - GRID TO REMAIN)
23	DEMOLISH EXISTING GWB CEILING
24	DEMOLISH EXISTING WOOD TRANSITION STRIP
25	REMOVE EXISTING DOOR, HARDWARE, FRAME, AND CARD READER TO BE INSTALLED IN THE TEMPORARY WALL AT DATA CENTER MAP
26	DEMOLISH EXISTING DOOR AND FRAME AND PATCH WALL
27	DEMOLISH EXISTING WALL AS REQUIRED FOR NEW DOOR AND FRAME

DEMOLITION GENERAL NOTES

1. SEE PME DRAWINGS FOR MORE SPECIFIC HVAC, ELECTRICAL, AND PLUMBING DEMOLITION NOTES.
2. GENERAL CONTRACTOR IS RESPONSIBLE FOR ALL GENERAL CONSTRUCTION DEMOLITION. MECHANICAL CONTRACTOR IS RESPONSIBLE FOR MECHANICAL DEMOLITION. PLUMBING CONTRACTOR IS RESPONSIBLE FOR PLUMBING DEMOLITION. ELECTRICAL CONTRACTOR IS RESPONSIBLE FOR ELECTRICAL DEMOLITION, UNLESS OTHERWISE NOTED.
3. ALL TRENCHING, CORING, ETC. IS TO BE DONE BY THE CONTRACTOR OF THE RESPECTIVE TRADE INVOLVED. EACH PRIME CONTRACTOR IS RESPONSIBLE FOR THEIR OWN FIRE PENETRATION SYSTEMS, FOR NEW PENETRATIONS, AND FOR PATCHING ANY NEW HOLES MADE.
4. THE TERM "REMOVED" SHALL BE DEFINED TO MEAN REMOVE AND DISPOSE OF OFFSITE IN A LEGAL, ENVIRONMENTALLY RESPONSIBLE MANNER.
5. WHERE WALLS, FLOORS, EQUIPMENT, ETC. ARE NOTED AS BEING REMOVED AND THIS CREATES VOID OR DAMAGE IN EXISTING WALLS OR FLOORS, CONTRACTOR IS RESPONSIBLE FOR REPAIRING WALL OR FLOOR WITH SIMILAR MATERIALS AND FINISHES AS ADJACENT CONSTRUCTION AS REQUIRED TO RESTORE FIRE RATINGS AND RECEIVE NEW FINISHES AS INDICATED ON FINISH PLANS.
6. EACH CONTRACTOR IS RESPONSIBLE FOR RELOCATING OR REPLACING THEIR UTILITIES LOCATED WITHIN EXISTING CONSTRUCTION THAT SHALL BE REMOVED. (I.E. PLUMBING CONTRACTOR IS RESPONSIBLE FOR RELOCATING PLUMBING VENTS AND ELECTRICAL CONTRACTOR IS RESPONSIBLE FOR RELOCATING DEVICES, RACEWAY, CONDUIT, ETC.)
7. REMOVE EXISTING ACT CEILING AS NOTED ON PLANS. EXISTING PLASTER SUB-CEILING TO REMAIN AND BE PATCHED TO MAINTAIN FIRE RATING.
8. LEAVE FLOORS, CEILINGS, AND OTHER WALLS WITH A SMOOTH AND FINISHED APPEARANCE WHERE WALLS HAVE BEEN REMOVED.
9. REMOVE EXISTING FLOOR FINISH AS OCCURS DOWN TO EXISTING TERRAZZO FLOOR OR SLAB WITHIN WORK AREA. PREPARE SURFACE FOR APPLICATION OF NEW FINISHES. THERE MAY BE FURRING OR SLEEPERS WITH ADDITIONAL LAYER OF FLOOR FINISH BELOW EXISTING CARPET.
10. THE PLUMBING CONTRACTOR IS RESPONSIBLE FOR SAW CUTTING ANY CONCRETE FOR NEW PLUMBING AND REPAIRING THE FLOOR AFTERWARD.
11. ALL PIPING AND CONDUIT SHALL BE CAPPED BELOW FLOOR SURFACES OR INSIDE WALLS. GENERAL CONTRACTOR SHALL PATCH ALL EXPOSED AREAS TO PROVIDE SMOOTH LEVEL SURFACES WITH NO PROTRUSIONS.
12. EXISTING WORK TO REMAIN SHALL BE PROTECTED FROM DAMAGE DURING DEMOLITION. GENERAL CONTRACTOR IS RESPONSIBLE FOR PROTECTING WORK TO MAINTAIN THE CONDITION IN WHICH IT WAS FOUND.
13. REMOVE ALL EXISTING WINDOW BLINDS, UNLESS OTHERWISE NOTED.
14. NOISE AND DEBRIS FROM DEMOLITION WORK MUST BE CONTROLLED. TEMPORARY BARRIERS MUST BE INSTALLED TO COMPLETELY ISOLATE THE NOISE, DUST, AND DEBRIS FROM DEMOLITION ACTIVITIES TO PREVENT THEM FROM AFFECTING OCCUPIED AREAS.
15. FIRE EXTINGUISHERS TO BE SALVAGED FROM DEMOLISHED CABINETS AND HANGERS AS NOTED AND REINSTALLED. PROTECT DURING WORK.

CEILING LEGEND

CEILING TYPE — A 10'-0" — CEILING HEIGHT

PATTERN	KEY	CEILING MATERIAL
	A	SUSPENDED 2X2 ACOUSTICAL CEILING TILES (SMOOTH LAY-IN)
	B	SUSPENDED 2X2 ACOUSTICAL CEILING TILES (TEGULAR)
	C	GYPSUM BOARD

SYMBOL	DESCRIPTION
	LINEAR SURFACE-MOUNT FIXTURE
	2X4 RECESSED DIRECT/INDIRECT TROFFER FIXTURE
	2X2 RECESSED DIRECT/INDIRECT TROFFER FIXTURE
○	RECESSED CAN LIGHT
	AIR SUPPLY DIFFUSER
	AIR RETURN REGISTER
	NEW FIRE ALARM (AUDIO/VISUAL)
•	SPRINKLER HEAD
⊠	SPRINKLER HEAD (WITH GUARD)
	EXISTING 2X2 RECESSED TROFFER FIXTURE
	EXISTING 2X4 RECESSED TROFFER FIXTURE
◦	EXISTING SPRINKLER HEAD (PENDANT)

CEILING NOTES:

1. SEE ELECTRICAL AND MECHANICAL PLANS FOR MORE INFORMATION.
2. PROVIDE 7/8" SFRM TO UNDERSIDE OF FLOOR SLAB INSIDE PANS TO ACHIEVE A 2-HOUR RATING PER UL J701, TYPICAL ALL LOCATIONS - SEE SHEET A504 FOR DETAILS.
3. WHERE CEILING KEYNOTE IS NOT NOTED, ROOM HAS EXPOSED STRUCTURE.
4. CENTER CEILING GRID IN ROOM. CENTER LIGHTS AS INDICATED. NOTIFY ARCHITECT OF ANY CONFLICTS OF LOCATIONS PRIOR TO INSTALLATION.
5. ALL DIMENSIONS ARE TO CENTERLINE OF FIXTURE UNLESS OTHERWISE NOTED.
6. SEE FINISH PLANS FOR PAINT COLORS OF CEILING SOFFITS.
7. CONTRACTOR IS NOT TO INSTALL ANY ACCESS PANELS IN GWB CEILING WITHOUT PRIOR APPROVAL AND COORDINATION WITH ARCHITECT.
8. WHERE EXISTING GRID IS TO REMAIN AND BE ADDED TO, DEMOLISH BACK TO MAIN RUNNER AND EXTEND WITH NEW GRID.
9. SEE FINISH SCHEDULE TO CLARIFY LOCATIONS OF EXISTING GRID WITH NEW/SALVAGED TILE OR NEW GRID WITH SALVAGED TILE.
10. G.C. IS RESPONSIBLE FOR REMOVING AND REPLACING ANY CEILING GRID AND TILE REQUIRED TO COMPLETE ALL NEW PME AND SPRINKLER WORK. G.C. IS RESPONSIBLE FOR REPLACING ALL DAMAGED GRID AND TILE CAUSED BY THIS WORK.

HUFFMAN ARCHITECTS
632 PERSHING ROAD
RALEIGH, NORTH CAROLINA 27608
P 919.417.3788
WWW.HUFFMANARCH.COM

WCOB - MEZZANINE AND SECOND FLOOR UP-FIT

PROJECT LOCATION
337 S. SALISBURY ST.
RALEIGH, NC 27601

CONSULTANTS

MECHANICAL, ELECTRICAL, AND PLUMBING
HDM ASSOCIATES
106 TARHEEL COURT
ELIZABETH CITY, NC 27909
252.698.3003 T

STRUCTURAL
LYSAGHT & ASSOCIATES
120 ST. MARY'S STREET
RALEIGH, NC 27605
919.833.0495 T

WAKE COUNTY
NORTH CAROLINA

SEALS

Huffman Architects PA CORPORATE 52498 NORTH CAROLINA

ERIC M. SOWERS REGISTERED ARCHITECT 9314 NORTH CAROLINA RALEIGH, N.C.
10/06/2022

PROJECT INFORMATION

PROJECT NO.:	2127
PHASE:	BID/PERMIT SET
DATE:	10.06.2022
DRAWN BY:	TC
CHECKED BY:	EMS

REVISIONS

NO.	DESCRIPTION	DATE
1	ADDENDUM NO 2	10/27/2022

SHEET INFORMATION

A112

SECOND FLOOR - REFLECTED CEILING DEMO + NEW WORK PLANS + DETAILS

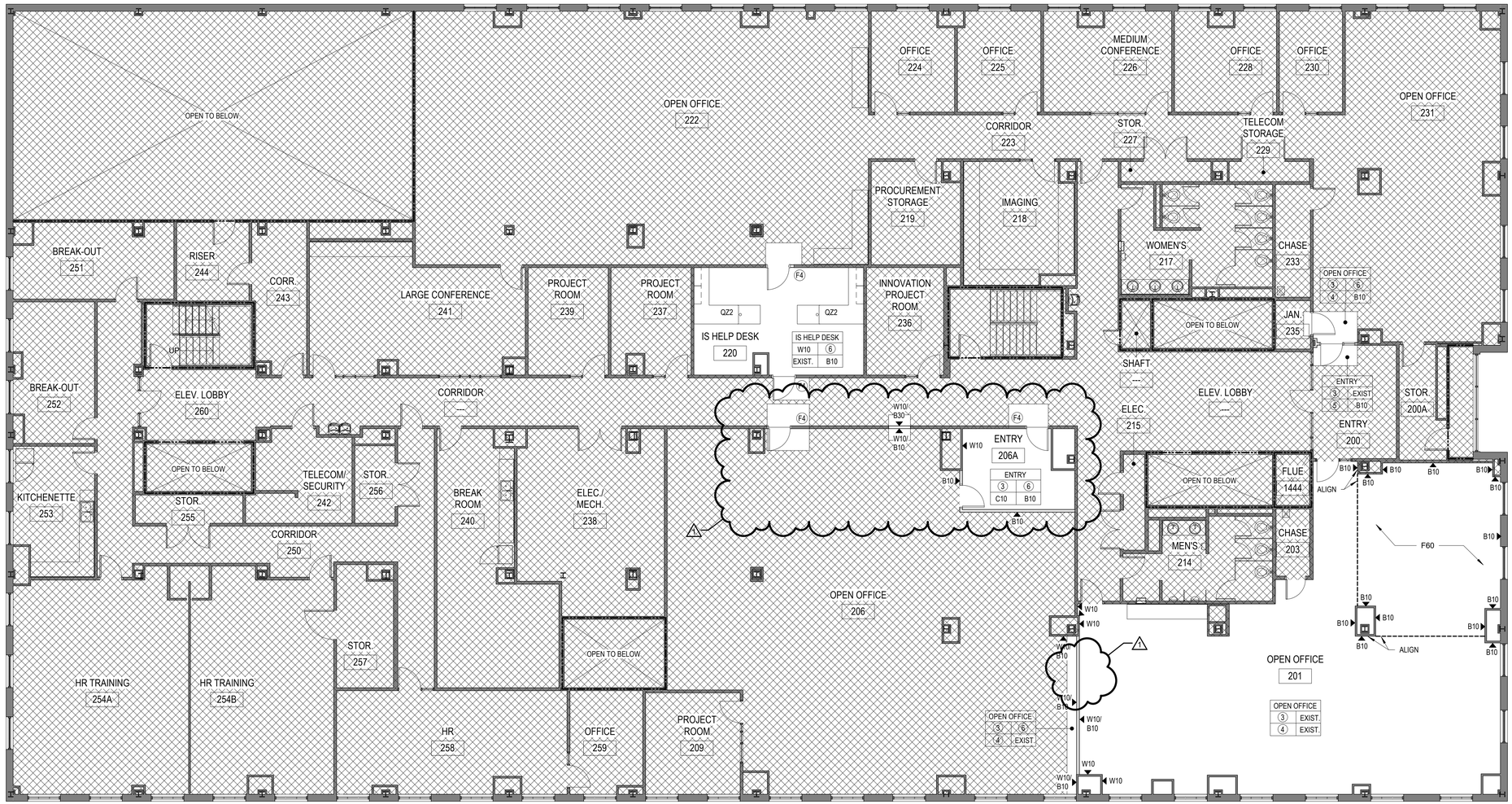

1 A132 SECOND FLOOR - FINISH PLAN

1/8" = 1'-0"

PLAN LEGEND

EXISTING WALLS	AREA OF NO WORK
DEMOLISHED WALLS	SHAFT (OPEN TO BELOW)
DEMOLISHED	FIRE EXTINGUISHER AND HOSE VALVE CABINET (SEMI-RECESSED TYPE) — FEHC
BEYOND	FIRE EXTINGUISHER CABINET (SEMI-RECESSED TYPE) — FEC
UNRATED CONSTRUCTION	FIRE EXTINGUISHER — FE
UNRATED CONSTRUCTION (TEMPORARY)	WALL-MOUNTED DISPLAY (NIC)
2-HR FIRE BARRIER (EXISTING)	
2-HR FIRE BARRIER (NEW)	

NOTES

1. ALL DIMENSIONS ARE TO FINISHED FACE OF WALL.
2. COORDINATE AND PROVIDE BACKING/BLOCKING FOR MILLWORK AND ITEMS ATTACHED OR MOUNTED TO WALLS OR CEILINGS.
3. LOCATE DOOR OPENINGS 3" OFF PERPENDICULAR WALL, UON.
4. FINISH WALL TO FLOOR FOR BASE ADHESION.
5. THE GENERAL CONTRACTOR SHALL FIELD VERIFY ALL DIMENSIONS AND CONDITIONS.

FINISH LEGEND

	NEW TERRAZZO (FIELD W/ 18" GRID)
	NEW PORCELAIN TILE (12" x 12")

NOTES

1. SEE FINISH SCHEDULE ON THIS SHEET FOR FINISH INFORMATION

FINISH SCHEDULE

ROOM NAME | WALL FINISH | CEILING MATERIAL OR FINISH | ROOM NAME | W## | C## | F## | B## | FLOOR FINISH | WALL BASE MATERIAL

KEY	FLOOR MATERIAL
F10	CARPET TILE - BENTLEY MILLS ARCADE LEGEND, 24" X 24", 8ALT4220T800601018, SPACE WOLF (800601), BRICK LAY PATTERN
F20	CARPET TILE - BENTLEY MILLS ARCADE LEGEND, 24" X 24", 8ALT4220T800601018, SPACE WOLF (800601), BACKGROUND ONLY/NO STRIPES, BRICK LAY PATTERN
F30	EPOXY TERRAZZO - MATCH SECOND FLOOR
F40	PORCELAIN TILE - MILESTONE BASALTINE, 12" X 12", 1096211, NUT, MEDIUM BED, 1/8" EPOXY GROUT
F50	VINYL COMPOSITION TILE - ARMSTRONG PREMIUM EXCELON CROWN TEXTURE, 12" X 12", TAUPE (5C901)
F60	CARPET TILE - BENTLEY MILLS ALLEGRO, 24" X 24", 8AO222207800244019, PACE (800244), BRICK LAY PATTERN

KEY	BASE MATERIAL
B10	RUBBER - JOHNSONITE/TARKETT COVE BASE, 4" HIGH, GREY HAZE (24)
B30	EPOXY TERRAZZO - CUSTOM FLAT BASE, MATCH SECOND FLOOR
B40	COVED PORCELAIN TILE - MILESTONE BASALTINE, 6" HIGH, 1096232, NUT, 1/8" EPOXY GROUT

KEY	WALL MATERIAL
W10	PAINT - SW 7011 NATURAL CHOICE
W20	ACCENT PAINT - SW 0020 PEACOCK PLUME
W30	PORCELAIN TILE - ROVA/LAUFEN ORION, 12" X 24", 88ORIN1224U, NIEVE UNPOLISHED, 1/8" EPOXY GROUT
W40	MOSAIC ACCENT TILE - PORCELANOSA SAVOYA, 12" X 13" (MOSAIC SHEET), 100226670, BEIGE, EPOXY GROUT
W50	ACCENT PAINT - SW 0048 BUNGLEHOUSE BLUE

KEY	CEILING MATERIAL
C10	2X2 ACOUSTICAL CEILING TILES (SMOOTH LAY-IN)
C20	2X2 ACOUSTICAL CEILING TILES (TEGULAR)
C30	GYPSUM WALL BOARD, PAINTED

KEY	MISCELLANEOUS
PL1	PLASTIC LAMINATE - WILSONART, 5TH AVE. ELM (7966K-12)
PL2	PLASTIC LAMINATE - PIONITE, GREIGE (SG210)
PL3	PLASTIC LAMINATE - FORMICA, GRAYSTONE (464-58)
SS1	SOLID SURFACE COUNTERTOP - CORIAN CANVAS, 1/2" THICK
QZ1	QUARTZ COUNTERTOP - LX HAUSYS VIATERA, 2CM THICK, SIENNA SAND
QZ2	QUARTZ COUNTERTOP - LX HAUSYS VIATERA, 2CM THICK, NATURAL LIMESTONE
RN1	RUBBER NOSING - JOHNSONITE/TARKETT, VDL-31-SQ, ZEPHYR (31)
TR1	TRANSITION/REDUCER STRIP - JOHNSONITE/TARKETT, GREY HAZE (24)

FINISH TAG KEYNOTES

1. W10 WITH W20 ACCENT, AS INDICATED ON FINISH PLAN
2. W10 WITH W30/W40/W50 ACCENT, AS INDICATED ON FINISH PLAN
3. PAINT NEW PARTITIONS W10 - EXISTING WALLS IN ROOM TO REMAIN UNLESS NOTED OTHERWISE
4. C10 AND C30, AS INDICATED ON REFLECTED CEILING PLAN
5. C20 AND C30, AS INDICATED ON REFLECTED CEILING PLAN
6. REPLACE CARPET TILE AS NEEDED WITH SALVAGED F10 FROM OPEN OFFICE 201
7. W10 WITH W50 ACCENT, AS INDICATED ON FINISH PLAN

FINISH PLAN KEYNOTES

- F1 PROVIDE HORIZONTAL LOUVER BLINDS; STRIP, PRIME, AND PAINT EXISTING WINDOW SILL; ENSURE LIKE NEW FINISH, INCLUDING PATCHING AND FILLING/SANDING ANY DEFECTS, TYPICAL ALL PERIMETER WINDOWS IN EXTERIOR WALL - SEE SHEET A601 FOR ELEVATIONS/DIMENSIONS
- F2 PROVIDE HORIZONTAL LOUVER BLINDS ON HM STOREFRONT GLAZING - SEE SHEET A601 FOR ELEVATIONS/DIMENSIONS
- F3 PAINT AND REPAIR ALL EXISTING PARTITIONS SCHEDULED TO REMAIN (TYPICAL WITHIN WORK AREA ON MEZZANINE)
- F4 PAINT AND REPAIR EXISTING WALLS AS REQUIRED WHERE NEW DEVICES/WORK OCCURS
- F5 EXISTING FLOOR TO REMAIN AS IS

NOTES:

1. ALL PAINT TO BE LATEX EGGSHELL FINISH, UON.
2. ALL NEW AND EXISTING GYPSUM BOARD IN THE WORK AREA SHALL BE SKIM COATED BEFORE PAINTING TO ACHIEVE A LEVEL 5 FINISH.
3. REFER TO INTERIOR ELEVATIONS FOR ADDITIONAL FINISH INFORMATION.
4. REFER TO MILLWORK DRAWINGS FOR ADDITIONAL MILLWORK FINISHES AND APPLICATIONS; FINISH PLANS INDICATE COUNTERTOP MATERIAL ONLY.
5. ALL FINISHES TO MEET "CLASS B" FLAME SPREAD REQUIREMENTS ("CLASS A" IN A NON-SPRINKLERED BUILDING) PER NC STATE BUILDING CODE CHAPTER 8.
6. TOILET PARTITIONS TO BE BRUSHED STAINLESS STEEL.
7. HOLLOW METAL DOOR FRAMES AND DOORS TO BE PAINTED TO MATCH EXISTING, SEMIGLOSS FINISH; SEE SPECIFICATIONS SECTION 09 9100.
8. WOOD VENEER DOORS TO BE GRAHAM PLAIN SLICED SELECT WHITE BIRCH, STAIN #700.
9. PAINT THE UNDERSIDE OF SOFFITS AND BULKHEADS THE SAME COLOR AS THAT SPECIFIED FOR THE FACE OF THE ADJOINING WALL, UON.
10. PROVIDE FINISHED FLOOR BELOW ALL VANITIES AND OPEN CASEWORK.
11. VARIATIONS IN FLOOR LEVEL IN EXCESS OF 1" FOR EVERY 10'-0" SHALL BE LEVELED BY CONTRACTOR; LEVELING SHALL BE COMPLETED WITH FLOOR READY TO RECEIVE NEW FINISHES AS SPECIFIED; CONTRACTOR SHALL VERIFY SLAB CONDITION PRIOR TO BID SUBMISSION.
12. ALL MISCELLANEOUS GRILLES, PLATES, OR OTHER DEVICES SHALL BE PAINTED TO MATCH THE WALL OR CEILING IN WHICH THEY ARE INSTALLED.
13. ALL NEW AND EXISTING FINISHES SCHEDULED TO REMAIN SHALL BE PROTECTED DURING CONSTRUCTION; ANY DAMAGE SHALL BE REPAIRED BY CONTRACTOR INVOLVED AT THEIR COST WITH NO COST TO OWNER.
14. CLEAN HVAC DIFFUSERS, DRAPERY POCKETS, FIRE EXTINGUISHER CABINET, AND SPEAKER GRILLS; DO NOT PAINT EQUIPMENT, UON.
15. ALL TERRAZZO STRIPS TO BE BRASS (MATCH EXISTING WIDTH).
16. SEE SHEET A502 FOR FLOOR TRANSITION DETAILS.

HUFFMAN ARCHITECTS
632 PERSHING ROAD
RALEIGH, NORTH CAROLINA 27608
P 919.417.3788
WWW.HUFFMANARCH.COM

WCOB - MEZZANINE AND SECOND FLOOR UP-FIT

PROJECT LOCATION
337 S. SALISBURY ST.
RALEIGH, NC 27601

CONSULTANTS

MECHANICAL, ELECTRICAL, AND PLUMBING
HDM ASSOCIATES
106 TARHEEL COURT
ELIZABETH CITY, NC 27909
252.698.3003 T

STRUCTURAL
LYSAGHT & ASSOCIATES
120 ST. MARY'S STREET
RALEIGH, NC 27605
919.833.0495 T

WAKE COUNTY
NORTH CAROLINA

SEALS

Huffman Architects CORPORATE 52498 NORTH CAROLINA

ERIC M. SOWERS REGISTERED ARCHITECT 9314 NORTH CAROLINA RALEIGH, N.C.

10/06/2022

PROJECT INFORMATION

PROJECT NO.:	2127
PHASE:	BID/PERMIT SET
DATE:	10.06.2022
DRAWN BY:	TC
CHECKED BY:	EMS

REVISIONS

NO.	DESCRIPTION	DATE
1	ADDENDUM NO 2	10/27/2022

SHEET INFORMATION

A132
SECOND FLOOR - FINISH PLAN

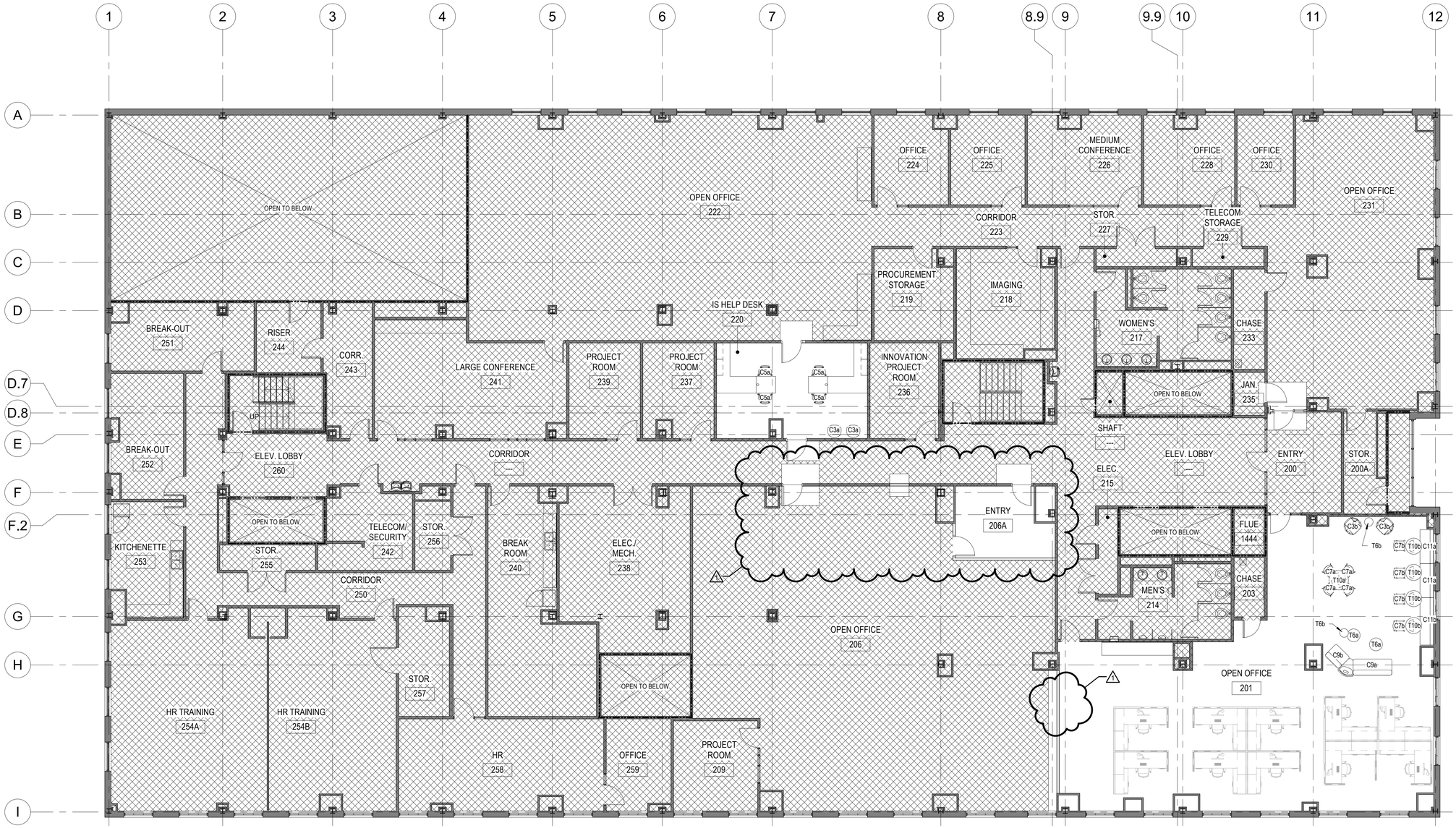

1 A152 SECOND FLOOR - FURNITURE PLAN (REF. ONLY)
1/8" = 1'-0"

PLAN LEGEND

EXISTING WALLS	AREA OF NO WORK
DEMOLISHED WALLS	SHAFT (OPEN TO BELOW)
DEMOLISHED	FIRE EXTINGUISHER AND HOSE VALVE CABINET (SEMI-RECESSED TYPE) — FEHC
BEYOND	
UNRATED CONSTRUCTION	FIRE EXTINGUISHER CABINET (SEMI-RECESSED TYPE) — FEC
UNRATED CONSTRUCTION (TEMPORARY)	FIRE EXTINGUISHER — FE
2-HR FIRE BARRIER (EXISTING)	WALL-MOUNTED DISPLAY (NIC)
2-HR FIRE BARRIER (NEW)	

NOTES

1. ALL DIMENSIONS ARE TO FINISHED FACE OF WALL.
2. COORDINATE AND PROVIDE BACKING/BLOCKING FOR MILLWORK AND ITEMS ATTACHED OR MOUNTED TO WALLS OR CEILINGS.
3. LOCATE DOOR OPENINGS 3" OFF PERPENDICULAR WALL, UON.
4. FINISH WALL TO FLOOR FOR BASE ADHESION.
5. THE GENERAL CONTRACTOR SHALL FIELD VERIFY ALL DIMENSIONS AND CONDITIONS.

FURNITURE LEGEND (TOTAL)

KEY	DESCRIPTION	COUNT
T1	24" X 60" WORK DESK	14
T3	36" DIA. WORK TABLE 29" HIGH	6
T4	48" X 120" CONFERENCE TABLE	1
T5	48" X 96" COUNTER HEIGHT CONFERENCE TABLE	1
T6a	24" DIA. OCCASIONAL TABLE	3
T6b	16" DIA. OCCASIONAL TABLE	6
T9	LAPTOP TABLE	1
T10a	36" DIA. WORK TABLE 36" HIGH	2
T10b	30" DIA. WORK TABLE 29" HIGH	4
S1	36" BOOKSHELF W/ 4 ADJUSTABLE SHELVES	5
C2	DESK CHAIR	41
C3a	SOFT GUEST CHAIR	2
C3b	LOUNGE CHAIR	4
C4	SLED GUEST CHAIR	10
C5a	TASK CHAIR W/ ARMS	33
C5b	TASK CHAIR W/O ARMS	16
C6	RESIN CHAIR	2
C7a	COUNTER HEIGHT WORK STOOL	14
C8	LOUNGE CHAIR WITH BACK SHIELD	2
C9a	MODULAR SECTIONAL CONFIGURATION 1	2
C9b	MODULAR SECTIONAL CONFIGURATION 2	2
C10a	63" BENCH	2
C10b	76" BENCH	1
D1	U-SHAPED EXECUTIVE DESK	5
D2	WORKSTATION DESK	5
WS-1	78" X 96" WORKSTATION (LONG FORMAT)	7
WS-2	78" X 96" WORKSTATION (SHORT FORMAT)	19
WS-3	96" X 120" WORKSTATION	5
A1	MOBILE WHITEBOARD	2

HUFFMAN ARCHITECTS

632 PERSHING ROAD
RALEIGH, NORTH CAROLINA 27608
P 919.417.3788
WWW.HUFFMANARCH.COM

WCOB - MEZZANINE AND SECOND FLOOR UP-FIT

PROJECT LOCATION
337 S. SALISBURY ST.
RALEIGH, NC 27601

CONSULTANTS

MECHANICAL, ELECTRICAL, AND PLUMBING
HDM ASSOCIATES
106 TARHEEL COURT
ELIZABETH CITY, NC 27909
252.698.3003 T

STRUCTURAL
LYSAGHT & ASSOCIATES
120 ST. MARY'S STREET
RALEIGH, NC 27605
919.833.0495 T

WAKE COUNTY
NORTH CAROLINA

SEALS

Huffman Architects CORPORATE 52498 NORTH CAROLINA

ERIC M. SOWERS REGISTERED ARCHITECT 9314 NORTH CAROLINA RALEIGH, N.C.

10/06/2022

PROJECT INFORMATION

PROJECT NO.:	2127
PHASE:	BID/PERMIT SET
DATE:	10.06.2022
DRAWN BY:	TC
CHECKED BY:	EMS

REVISIONS

NO.	DESCRIPTION	DATE
1	ADDENDUM NO 2	10/27/2022

SHEET INFORMATION

A152
SECOND FLOOR - FURNITURE PLAN (REFERENCE ONLY)

DOOR SCHEDULE														
	DOOR					FRAME			DETAIL					
NUMBER	HEIGHT	WIDTH	MATERIAL	FINISH	ELEVATION	MATERIAL	FINISH	ELEVATION	HEAD	JAMB	SILL	HW	RATING	COMMENTS
206	7' - 0"	3' - 0"	WD	STAIN	A	HM	PAINT	2	7/A601	8/A601	1/A502	2	--	CARD READER
206A	7' - 0"	3' - 0"	WD/GL	STAIN	B	HM	PAINT	2	7/A601	8/A601	1/A502	2	--	CARD READER
206B	7' - 0"	3' - 0"	WD	STAIN	B	HM	PAINT	2	7/A601	8/A601	--	1	--	
220	7' - 0"	3' - 0"	WD/GL	STAIN	C	HM	PAINT	2	7/A601	8/A601	1/A502	2	--	CARD READER
220A	7' - 0"	3' - 0"	WD/GL	STAIN	B	HM	PAINT	2	7/A601	8/A601	--	2	--	CARD READER
231	7' - 0"	3' - 0"	WD	STAIN	A	HM	PAINT	4	4/A601	2/A601	5/A502	3	--	CARD READER
235	7' - 0"	3' - 0"	WD	STAIN	A	HM	PAINT	2	7/A601	8/A601	--	14	--	
M01	8' - 0"	3' - 0"	WD/GL	STAIN	C	HM	PAINT	3	5/A601	2/A601	1/A502	3A	--	CARD READER
M02	7' - 0"	3' - 0"	WD	STAIN	A	HM	PAINT	2	7/A601	8/A601	1/A502	4	90 MIN	EXIT ONLY
M03	7' - 0"	3' - 0"	WD	STAIN	A	HM	PAINT	4	4/A601	2/A601	--	5	--	
M04	7' - 0"	3' - 0"	WD	STAIN	A	HM	PAINT	4	4/A601	2/A601	--	6	--	
M05	7' - 0"	3' - 0"	WD	STAIN	A	HM	PAINT	4	4/A601	2/A601	--	6	--	
M06	7' - 0"	3' - 0"	WD	STAIN	A	HM	PAINT	4	4/A601	2/A601	--	6	--	
M08	7' - 0"	3' - 0"	--	--	--	HM	PAINT	1	--	11/A601	2/A502	--	--	FRAMED OPENING
M09	7' - 0"	3' - 0"	WD	STAIN	A	HM	PAINT	4	4/A601	2/A601	--	6	--	
M10	7' - 0"	3' - 0"	WD	STAIN	A	HM	PAINT	2	7/A601	8/A601	--	2	--	CARD READER
M11	7' - 0"	3' - 0"	WD	STAIN	A	HM	PAINT	5	4/A601	2/A601	1/A502	7	--	
M11A	7' - 0"	3' - 0"	WD	STAIN	A	HM	PAINT	5	4/A601	2/A601	--	2	--	CARD READER
M20	7' - 0"	3' - 0"	WD/GL	STAIN	B	HM	PAINT	2	7/A601	8/A601	1/A502	2	--	CARD READER
M21	7' - 0"	3' - 0"	WD	STAIN	A	HM	PAINT	2	7/A601	8/A601	--	8	--	CARD READER
M23	7' - 0"	3' - 0"	WD	STAIN	A	HM	PAINT	4	4/A601	2/A601	--	7	--	
M25	7' - 0"	3' - 0"	WD	STAIN	A	HM	PAINT	2	7/A601	8/A601	--	9	--	
M27	7' - 0"	3' - 0"	WD	STAIN	A	HM	PAINT	4	4/A601	2/A601	1/A502	11	--	
M27A	7' - 0"	3' - 0"	WD	STAIN	A	HM	PAINT	2	7/A601	8/A601	--	12	--	
M27B	7' - 0"	3' - 0"	WD	STAIN	A	HM	PAINT	4	4/A601	2/A601	--	3B	--	CARD READER
M28	7' - 0"	3' - 0"	WD	STAIN	A	HM	PAINT	4	4/A601	2/A601	1/A502	13	--	
M29	7' - 0"	3' - 0"	WD	STAIN	A	HM	PAINT	2	7/A601	8/A601	--	2	--	CARD READER
M30	7' - 0"	2' - 0"	WD	STAIN	A	HM	PAINT	2	7/A601	8/A601	--	14	--	
M40	7' - 0"	3' - 8"	WD	STAIN	A	HM	PAINT	2	7/A601	8/A601	4/A502	15	--	CARD READER
M41	7' - 0"	3' - 0"	--	--	--	HM	PAINT	1	--	11/A601	2/A502	--	--	FRAMED OPENING
M42	7' - 0"	3' - 8"	--	--	--	--	--	--	--	--	--	--	--	TEMPORARY DOOR W/ CARD READER
M45	7' - 0"	3' - 0"	WD	STAIN	A	HM	PAINT	2	7/A601	8/A601	2/A502	6	--	
M47	7' - 0"	3' - 0"	WD	STAIN	A	HM	PAINT	2	7/A601	8/A601	3/A502	17	--	
M48	7' - 0"	3' - 0"	WD	STAIN	A	HM	PAINT	2	7/A601	8/A601	3/A502	18	--	
M50	7' - 0"	3' - 0"	--	--	--	HM	PAINT	1	--	11/A601	4/A502	--	--	FRAMED OPENING
MS1	7' - 0"	3' - 0"	WD	STAIN	A	HM	PAINT	2	9/A601	10/A601	--	19	90 MIN	CARD READER
MS2	7' - 0"	3' - 0"	WD	STAIN	A	HM	PAINT	2	9/A601	10/A601	--	20	90 MIN	CARD READER
MS3	7' - 0"	3' - 0"	WD	STAIN	A	HM	PAINT	2	9/A601	10/A601	--	21	90 MIN	CARD READER

1

DOOR SCHEDULE NOTES

1. CAULK DOOR JAMBS AND HEADS WHERE GAPS BETWEEN WALL & FRAME EXCEED 1/16", TYP.
2. CONTRACTOR SHALL COORDINATE DOOR HARDWARE KEYING WITH OWNER.
3. INSTALLATION OF DOORS AND HARDWARE SHALL MEET MINIMUM ACCESSIBILITY REQUIREMENTS. ALL DOORS SHALL COMPLY WITH THE CLEARANCES FOR APPROACHES AS INDICATED.
4. ALL DOORS SHALL HAVE FREE EGRESS OUT OF THE AREA SERVED.
5. ALL DOORS SHALL HAVE HARDWARE COORDINATED WITH SECURITY REQUIREMENTS AND ASSOCIATED ELECTRICAL WORK.

LARGE DOOR/FRAME AND WINDOW ELEVATIONS

NOTE: ALL GLASS TO BE TEMPERED

DOOR ELEVATIONS

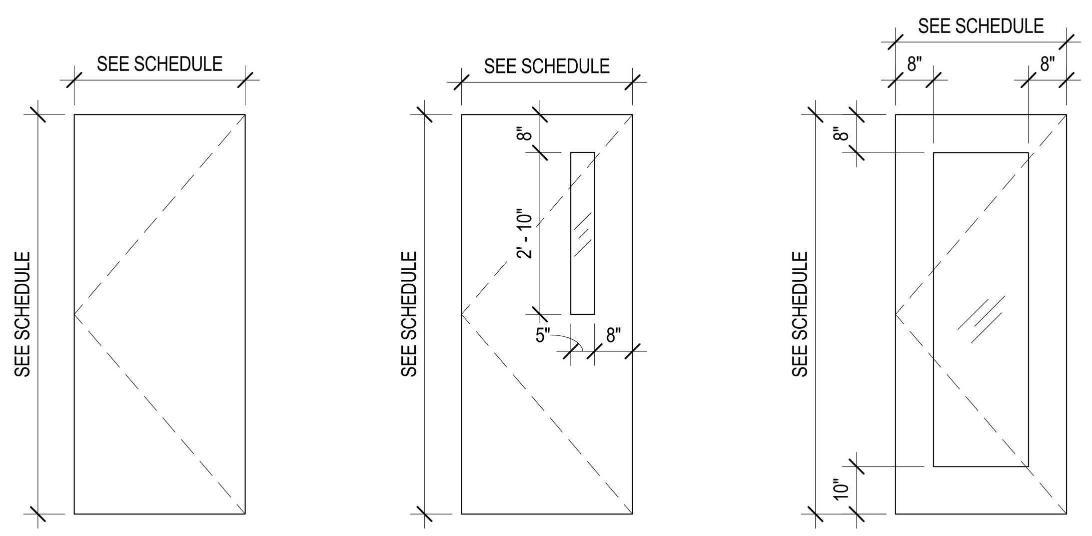

FLUSH SOLID CORE WOOD DOOR - STAINED

A

FLUSH SOLID CORE WOOD DOOR W/ NARROW LITE - STAINED

B

SOLID CORE WOOD DOOR W/ FULL GLASS LITE - STAINED

C

EXISTING WINDOW ELEVATION

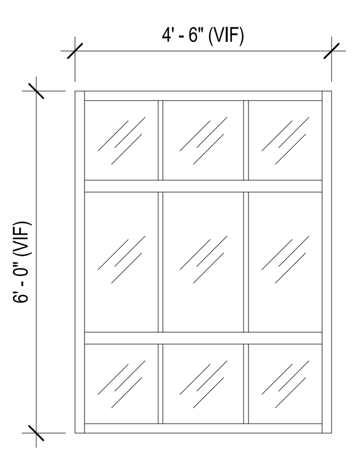

EXISTING 9-LITE METAL WINDOW - PAINTED - TYP. ALL EXISTING EXTERIOR WINDOWS

FRAME ELEVATIONS

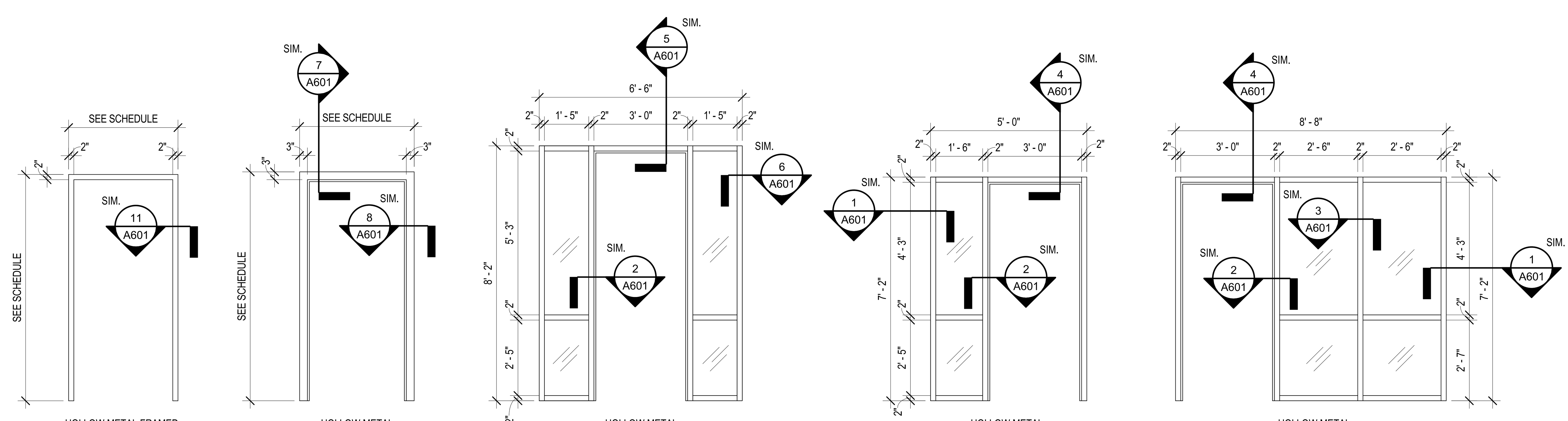

HOLLOW METAL FRAMED OPENING - PAINTED

1

HOLLOW METAL FRAME - PAINTED

2

HOLLOW METAL FRAME - PAINTED

3

HOLLOW METAL FRAME - PAINTED

4

HOLLOW METAL FRAME - PAINTED

5

NOTE: BASED ON CURRIES CUSTOM PROFILE 275 - PROVIDE SAMPLE BEFORE PROCUREMENT

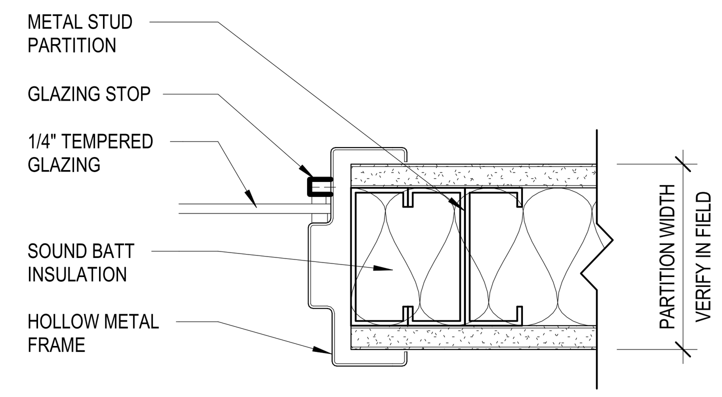

1 A601 TYP. HM JAMB (END) 3" = 1'-0"

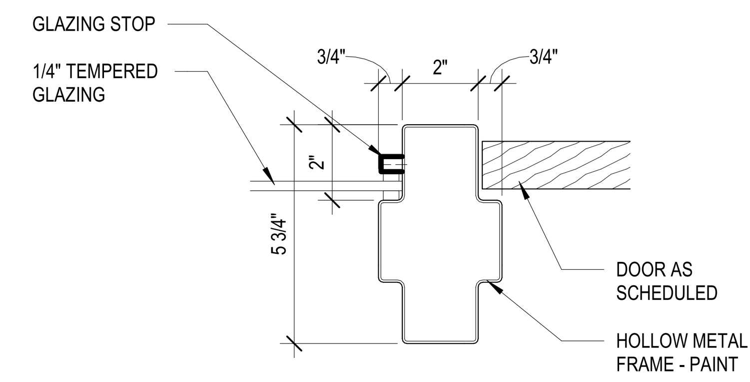

2 A601 TYP. HM JAMB (GL/DR) 3" = 1'-0"

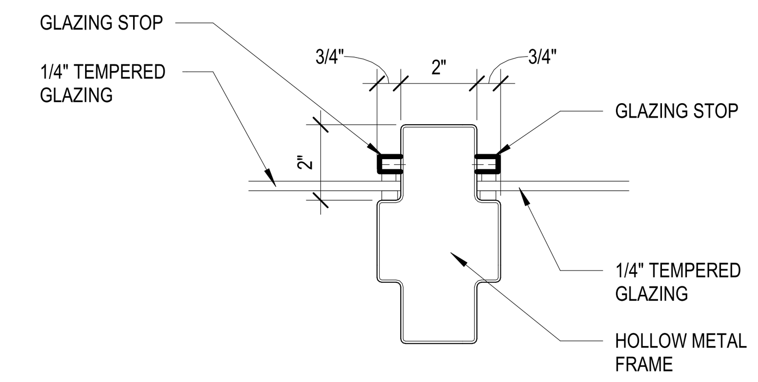

3 A601 TYP. HM JAMB (GL/GL) 3" = 1'-0"

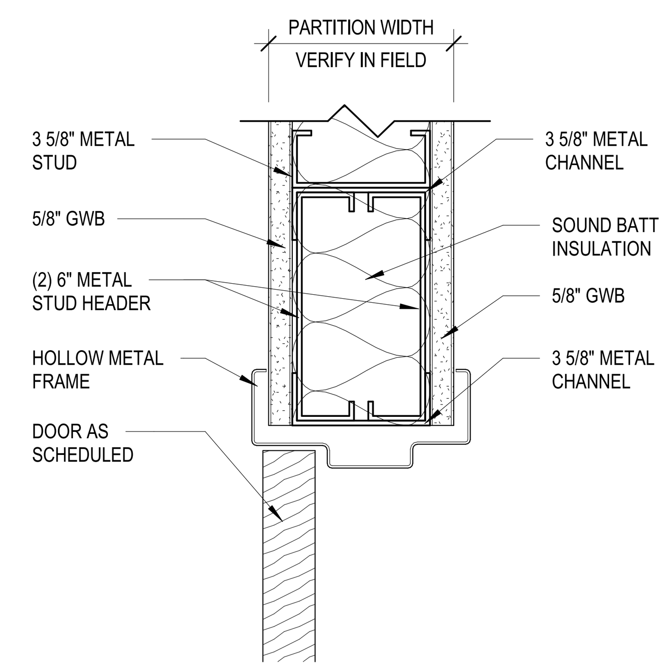

4 A601 TYP. HM HEAD 3" = 1'-0"

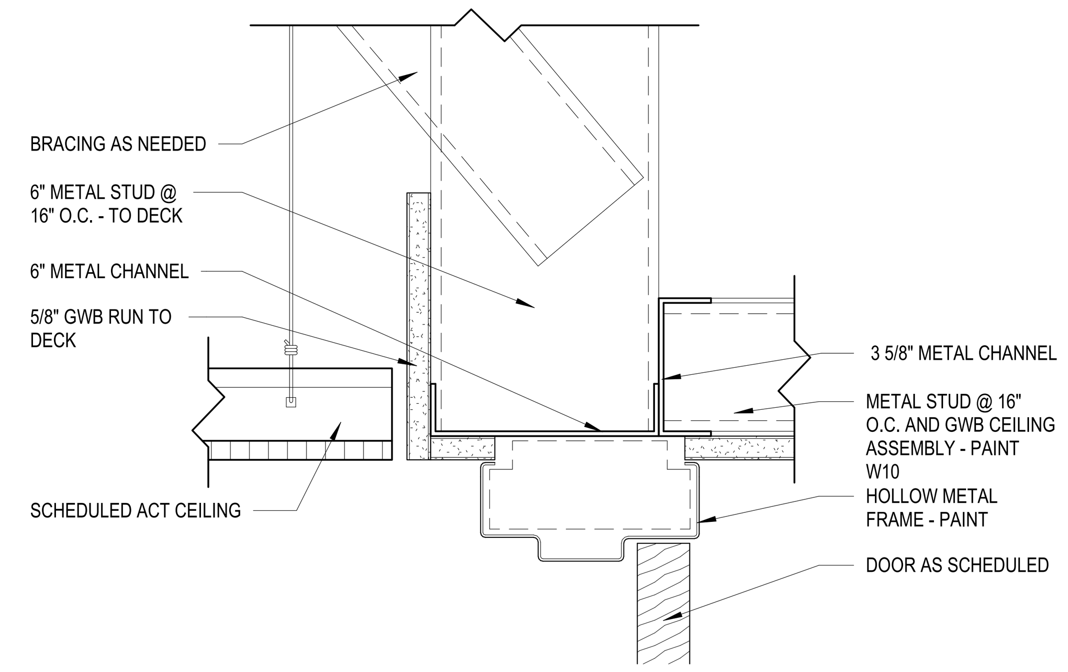

5 A601 HM FRAME TYPE 3 HEAD 3" = 1'-0"

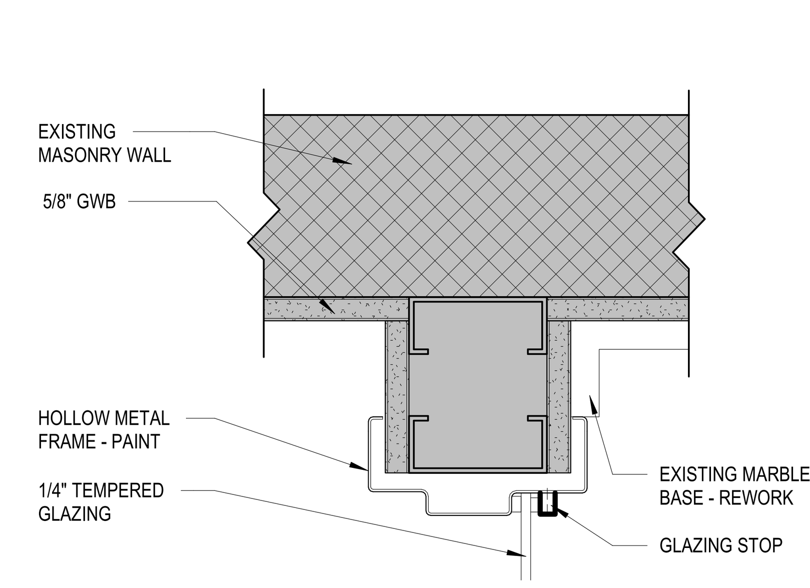

6 A601 HM FRAME TYPE 3 JAMB 3" = 1'-0"

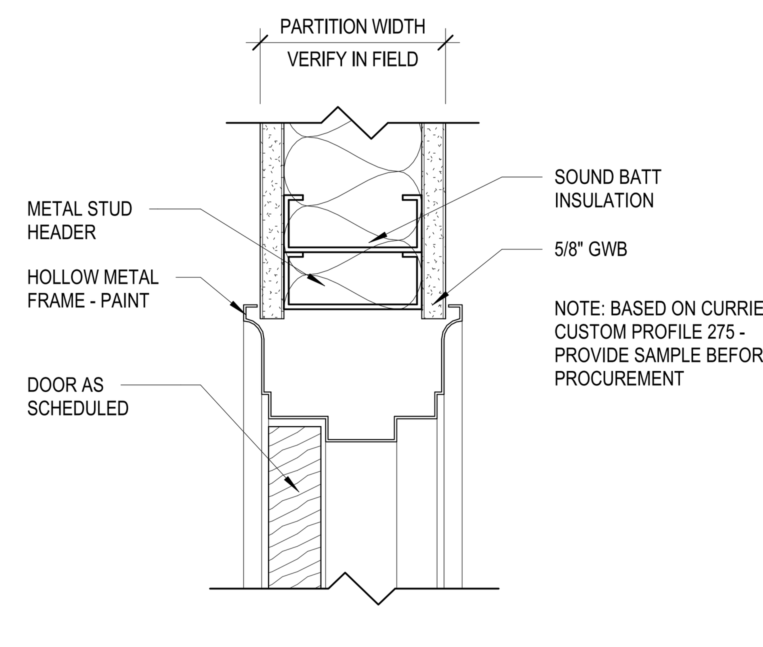

7 A601 TYP. 275 HM HEAD 3" = 1'-0"

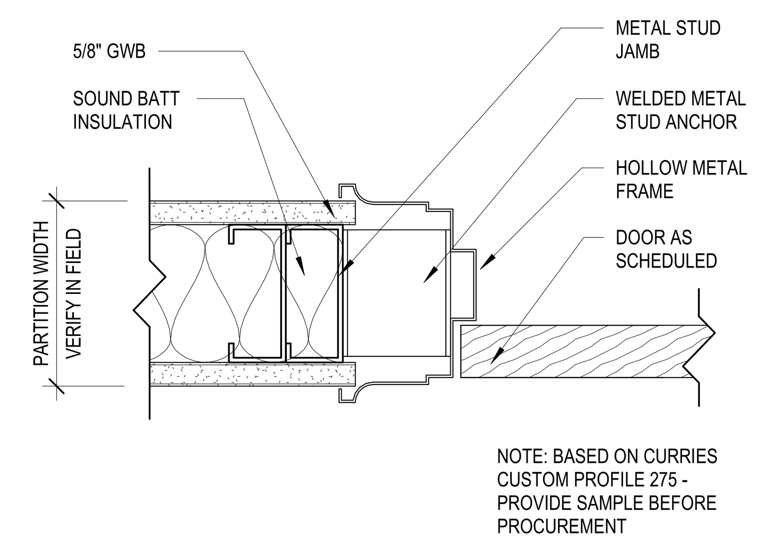

8 A601 TYP. 275 HM JAMB 3" = 1'-0"

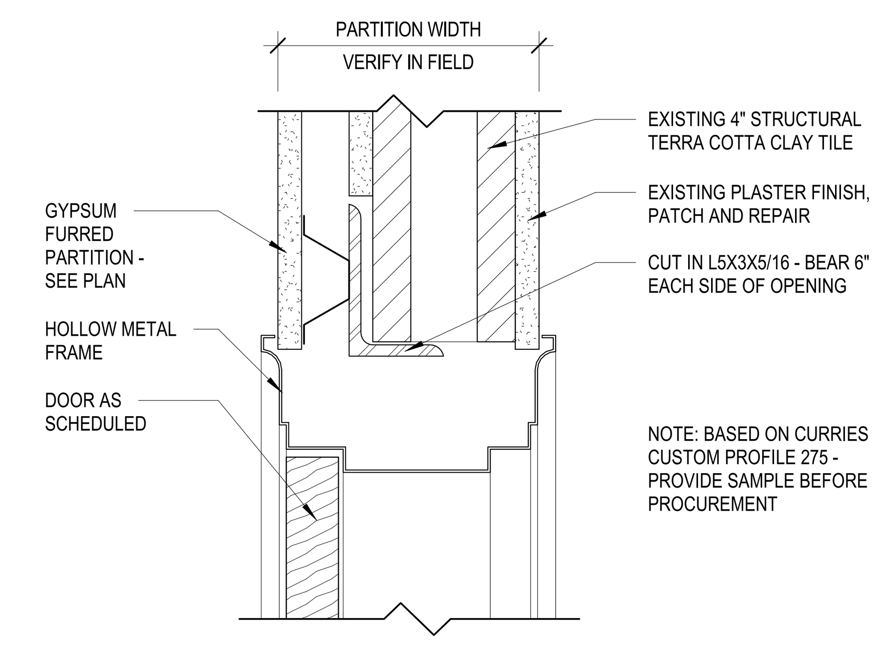

9 A601 TYP. 275 HM HEAD AT EXISTING WALL 3" = 1'-0"

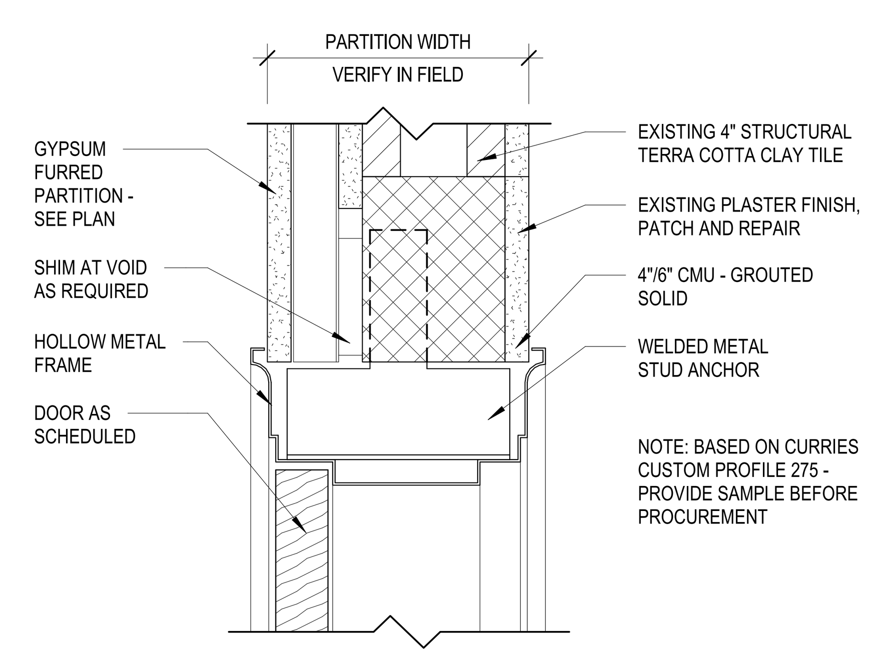

10 A601 TYP. 275 HM JAMB AT EXISTING WALL 3" = 1'-0"

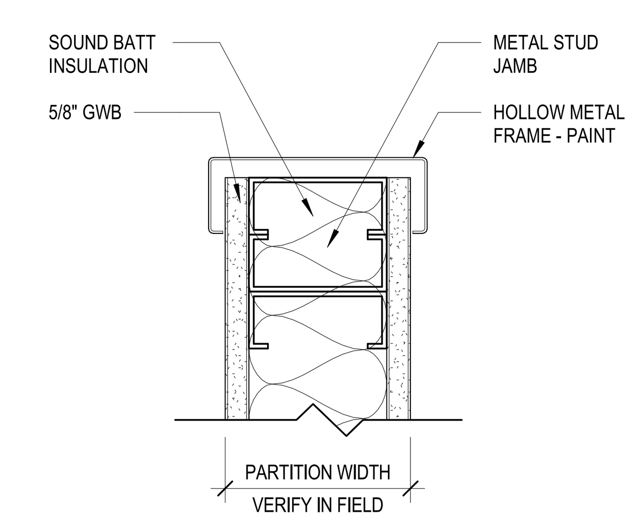

11 A601 TYP. HM FRAMED OPENING JAMB 3" = 1'-0"

HUFFMAN ARCHITECTS
632 PERSHING ROAD
RALEIGH, NORTH CAROLINA 27608
P 919.417.3788
WWW.HUFFMANARCH.COM

WCOB - MEZZANINE AND SECOND FLOOR UP-FIT

PROJECT LOCATION

337 S. SALISBURY ST.
RALEIGH, NC 27601

CONSULTANTS

MECHANICAL, ELECTRICAL, AND PLUMBING
HDM ASSOCIATES
106 TARHEEL COURT
ELIZABETH CITY, NC 27909
252.698.3003 T

STRUCTURAL
LYSAGHT & ASSOCIATES
120 ST. MARY'S STREET
RALEIGH, NC 27605
919.833.0495 T

WAKE COUNTY
NORTH CAROLINA

SEALS

Huffman Architects P.A. CORPORATE 52498 NORTH CAROLINA

ERIC M. SOWERS REGISTERED ARCHITECT 9314 NORTH CAROLINA RALEIGH, N.C.

10/06/2022

PROJECT INFORMATION

PROJECT NO.: 2127
PHASE: BID/PERMIT SET
DATE: 10.06.2022
DRAWN BY: TC
CHECKED BY: EMS

REVISIONS

NO.	DESCRIPTION	DATE
1	ADDENDUM NO 2	10/27/2022

SHEET INFORMATION

A601

DOOR SCHEDULE + DOOR/FRAME/WINDOW ELEVATIONS + DETAILS