PCA366036-20000

POLYMER CONCRETE ASSEMBLY

36" x 60" x 36"
(For actual dimensions see drawing)

Polymer Concrete Assembly, Straight Sides, No Floor, WUC 3.6, ANSI/SCTE 77 - 2010 Tier 22, 3/8" Hex Bolts, Standard Nameplate (Specify at time of order) Installed

LOAD RATINGS
Incidental Traffic - Parking Lot, Sidewalk
Conforms to:
- WUC 3.6
- ASTM C 857
- ANSI/SCTE 77 - 2010

FEATURES:
- UL Classified Polymer Concrete
- Drop-In nameplate
- Shipped assembled
- Skid resistant cover
- Stainless steel bolts
- Cast-in floating nut box
  - Integral drain holes

Additional product information continued on the reverse

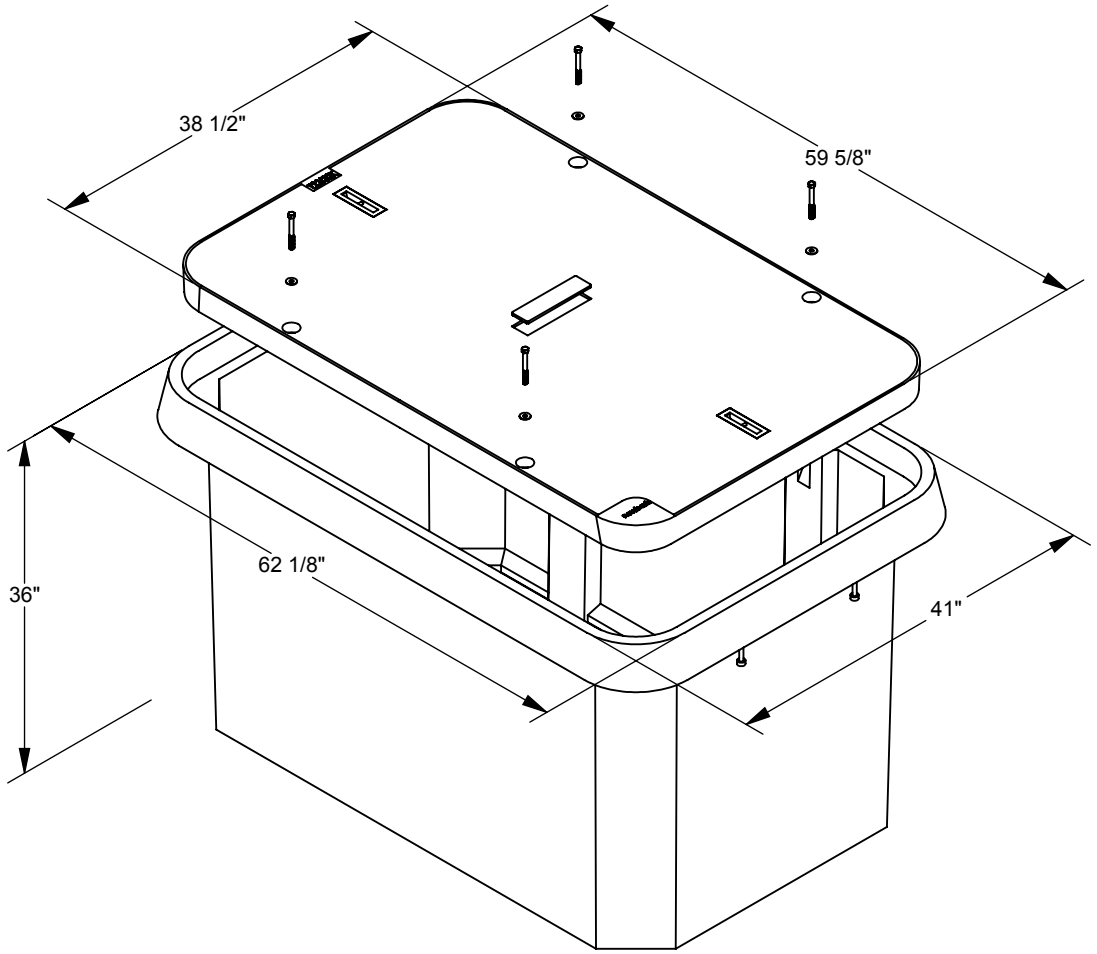

newbasis
Composites for Infrastructure

2626 Kansas Avenue
Riverside, California 92507
951.787.0600
951.787.0632 (fax)
info@newbasis.com
newbasis.com

Inside Dimensions		
Length	Width	Depth
57 3/16"	34 1/16"	33"
54 1/2"	32 7/8"	

Drawn By: PIPGEN

Rev: B.0

PCA366036-20000

POLYMER CONCRETE ASSEMBLY

Polymer Concrete Assembly, Straight Sides, No Floor, WUC 3.6, ANSI/SCTE 77 - 2010 Tier 22, 3/8" Hex Bolts, Standard Nameplate (Specify at time of order) Installed

36" x 60" x 36" **For actual dimensions, see drawing on front side.**

AVAILABLE OPTIONS

- ☑ Tier 22 Load Rating
- ☐ Penta Bolts
- ☐ Telephone EMS
- ☐ Power EMS
- ☐ 2 Racks Installed
- ☐ 4 Racks Installed
- ☑ 1 Piece Cover (4 Bolts)
- ☐ Custom Nameplate Installed
- ☐ Custom Nameplate Shipped Separately
- ☑ Standard Nameplate Installed
- ☐ Standard Nameplate Shipped Separately

☑ - Indicates a selected option

NAMEPLATES

One standard nameplate included with each assembly, installed at the factory or easily installed in the field. Custom nameplates are available. Contact customer service.

Standard Nameplates

- Electric
- Telephone
- Fiber Optic
- Water
- Street Lighting
- Broadband
- Traffic
- CATV
- Traffic Signal
- Communications

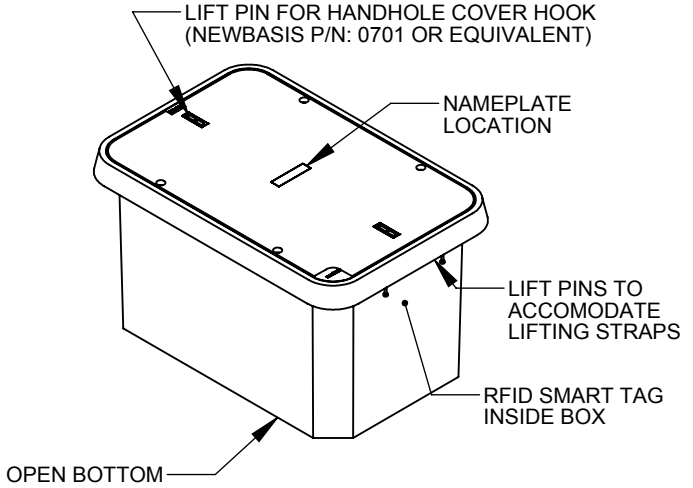

MATERIAL PROPERTIES AND ATTRIBUTES

Compressive Strength
Polymer Concrete - **87 MPa**
Per ASTM D695

Flexural Strength
Polymer Concrete - **20 MPa**
Per ASTM D790

Coefficient of Friction (Dry)
1.085
Per ASTM C1028

Polymer Concrete
- Advanced composite: Very high strength to weight ratio
- Non-metallic
- Non-conductive
- UV Resistant
- High impact resistant
- Impervious to chemicals and moisture

Materials tested in accordance with ASTM D-543 and ASTM D-570

WEIGHTS AND SHIPPING

COVER WEIGHT: 344 lbs.

BOX WEIGHT: 630 lbs.

ASSEMBLY WEIGHT: 974 lbs.

LOADED PALLET WEIGHT: 2340 lbs.

Standard shipping includes van delivery of pallet quantities to the lower 48 states. Partial pallet quantities and flat bed shipping available at an additional cost.

PACKAGING (Steel Banding, Edge Protection)

PALLET QUANTITY: 2

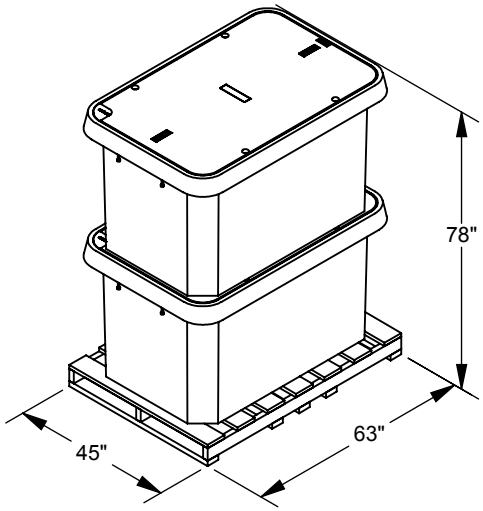

Drawn By: PIPGEN

Rev: B.0