PCA243636-90014

GDOT TYPE 4

POLYMER CONCRETE ASSEMBLY

24" X 36" X 36"
(For actual dimensions see drawing)

Polymer Concrete Assembly, Straight Sides, 4 Bolt Cover, Floor w/Drain Hole, WUC 3.6, ANSI/SCTE 77- "T15/20K, " 3/8" Hex Bolts, 4 Racks w/4 Rack Arms, Custom Nameplate (GDOT Communications) Installed

LOAD RATINGS

Incidental Traffic - Parking Lot, Sidewalk
Conforms to:

- WUC 3.6
- ASTM C 857
- ANSI/SCTE 77

FEATURES:

- USDA/RUS Approved
- Drop-In nameplate
- Shipped assembled
- Skid resistant cover
- Stainless steel bolts
- Cast-in floating nut box
  - Integral drain holes

Additional product information continued on the reverse

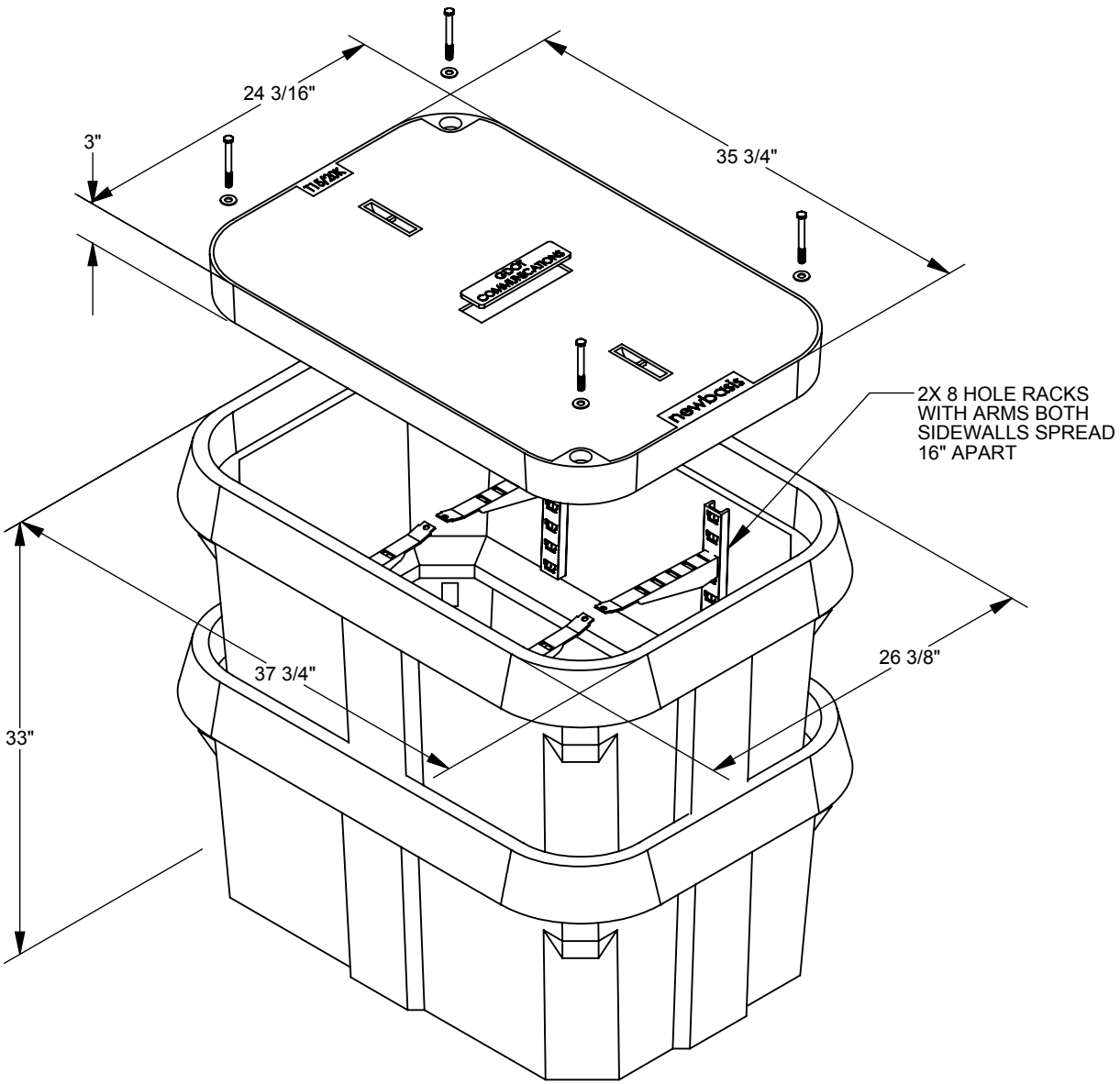

Inside Dimensions		
Length	Width	Depth
33 5/8"	22"	30"
30"	18 3/8"	

Rev: A.1

newbasis
Composites for Infrastructure

2626 Kansas Avenue
Riverside, California 92507

951.787.0600

951.787.0632 (fax)

info@newbasis.com

newbasis.com

PCA243636-90014
GDOT TYPE 4

POLYMER CONCRETE ASSEMBLY

Polymer Concrete Assembly, Straight Sides, 4 Bolt Cover, Floor w/Drain Hole, WUC 3.6, ANSI/SCTE 77- "T15/20K," 3/8" Hex Bolts, 4 Racks w/4 Rack Arms, Custom Nameplate (GDOT Communications) Installed

24" X 36" X 36F" **For actual dimensions, see drawing on front side.**

AVAILABLE OPTIONS

- ☐ Penta Bolts
- ☐ Telephone EMS
- ☐ Power EMS
- ☐ 2 Piece Cover
- ☑ Integral Floor w/Drain Hole
- ☑ 4 Bolt Cover
- ☑ 4 Racks w/4 Arms
- ☑ Custom Nameplate Installed
- ☐ Custom Nameplate Shipped Separately
- ☐ Standard Nameplate Installed
- ☐ Standard Nameplate Shipped Separately

☑ - Indicates a selected option

NAMEPLATES

One standard nameplate included with each assembly, installed at the factory or easily installed in the field. Custom nameplates are available. Contact customer service.

Standard Nameplates

- Electric
- Telephone
- Fiber Optic
- Water
- Street Lighting
- Broadband
- Traffic
- CATV
- Traffic Signal
- Communications

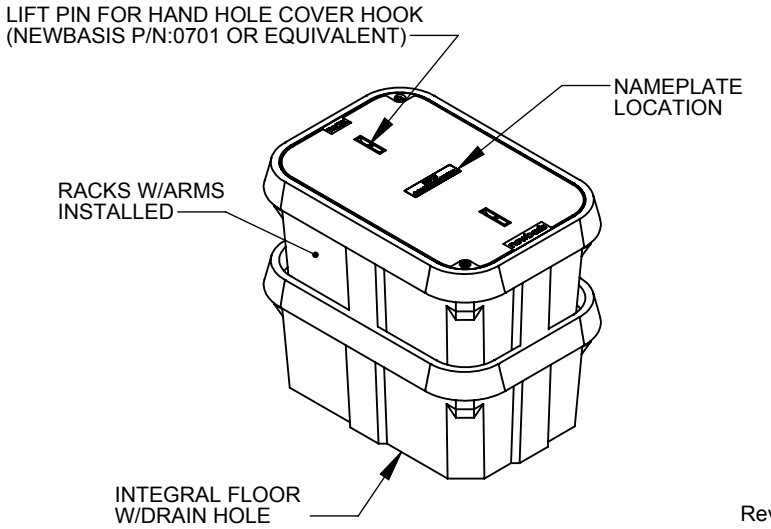

Rev: A.1

MATERIAL PROPERTIES AND ATTRIBUTES

Compressive Strength
Polymer Concrete - **87 MPa**
Per ASTM D695

Flexural Strength
Polymer Concrete - **20 MPa**
Per ASTM D790

Coefficient of Friction (Dry)
1.085
Per ASTM C1028

Polymer Concrete
- Advanced composite: Very high strength to weight ratio
- Non-metallic
- Non-conductive
- UV Resistant
- High impact resistant
- Impervious to chemicals and moisture

Materials tested in accordance with ASTM D-543 and ASTM D-570

WEIGHTS AND SHIPPING

COVER WEIGHT: 122 lbs.

BOX WEIGHT: 329 lbs.

ASSEMBLY WEIGHT: 451 lbs.

LOADED PALLET WEIGHT: 1864 lbs.

Standard shipping includes van delivery of pallet quantities to the lower 48 states. Partial pallet quantities and flat bed shipping available at an additional cost.

PACKAGING (Steel Banding, Edge Protection)

PALLET QUANTITY: 4

