# PCA243636-90011

## GDOT TYPE 6

POLYMER CONCRETE ASSEMBLY

24" X 36" X 36X"
(For actual dimensions see drawing)

Polymer Concrete Assembly, Straight Sides, No Floor, WUC 3.6, ANSI/SCTE 77- "T15/20K", 3/8" Hex Bolts, 4 Racks w/Arms, (16) 2" Terminators 4 per side, Custom Nameplate (GDOT COMMUNICATIONS) Installed

**LOAD RATINGS**

Incidental Traffic - Parking Lot, Sidewalk
Conforms to:

- WUC 3.6
- ASTM C 857
- ANSI/SCTE 77

**FEATURES:**

- USDA/RUS Approved
- Drop-In nameplate
- Shipped assembled
- Skid resistant cover
- Stainless steel bolts
- Cast-in floating nut box
  - Integral drain holes

**Additional product information continued on the reverse**

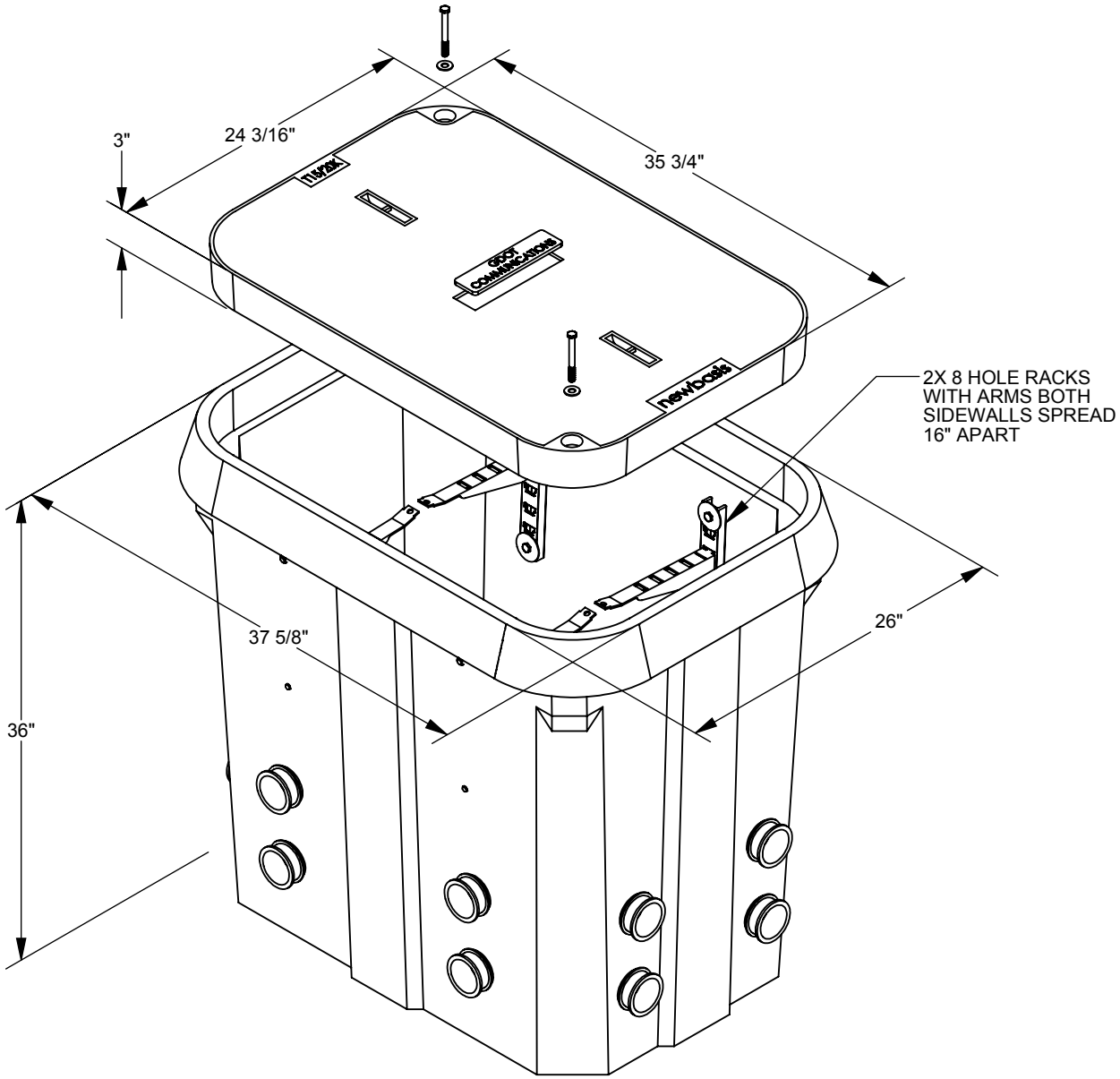


| Inside Dimensions | | |
|---|---|---|
| Length | Width | Depth |
| 34" | 22 1/2" | 33" |
| 29 3/8" | 18 5/8" | |

Rev: A.1


newbasis
Composites for Infrastructure

2626 Kansas Avenue
Riverside, California 92507
951.787.0600
951.787.0632 (fax)
info@newbasis.com
newbasis.com

# PCA243636-90011

## GDOT TYPE 6

POLYMER CONCRETE ASSEMBLY

Polymer Concrete Assembly, Straight Sides, No Floor, WUC 3.6, ANSI/SCTE 77- "T15/20K", 3/8" Hex Bolts, 4 Racks w/Arms, (16) 2" Terminators 4 per side, Custom Nameplate (GDOT COMMUNICATIONS) Installed

24 X 36" X 36" **For actual dimensions, see drawing on front side.**

### AVAILABLE OPTIONS

- ☐ Penta Bolts
- ☐ Telephone EMS
- ☐ Power EMS
- ☑ 4 Racks w/Arms
- ☑ Custom Nameplate Installed
- ☐ Custom Nameplate Shipped Separately
- ☐ Standard Nameplate Installed
- ☐ Standard Nameplate Shipped Separately

☑ - Indicates a selected option

### NAMEPLATES

One standard nameplate included with each assembly, installed at the factory or easily installed in the field. Custom nameplates are available. Contact customer service.

Standard Nameplates

- Electric
- Telephone
- Fiber Optic
- Water
- Street Lighting
- Broadband
- Traffic
- CATV
- Traffic Signal
- Communications

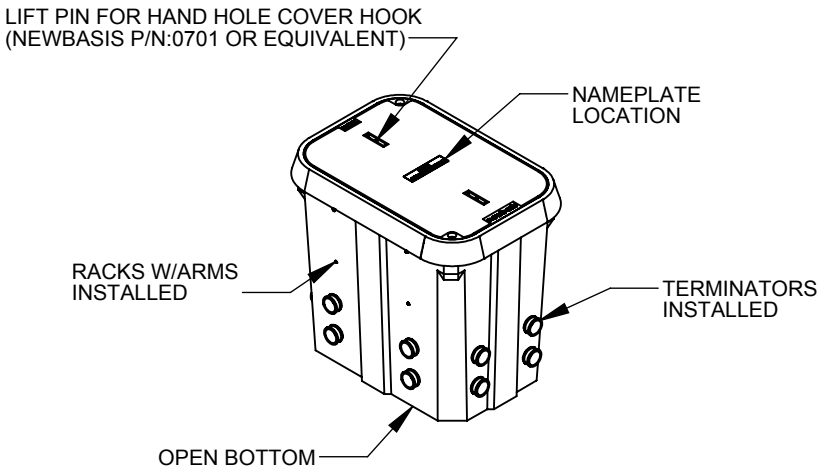


Rev: A.1

### MATERIAL PROPERTIES AND ATTRIBUTES

**Compressive Strength**
Polymer Concrete - **87 MPa**
Per ASTM D695

**Flexural Strength**
Polymer Concrete - **20 MPa**
Per ASTM D790

**Coefficient of Friction (Dry)**
**1.085**
Per ASTM C1028

Polymer Concrete
- Advanced composite: Very high strength to weight ratio
- Non-metallic
- Non-conductive
- UV Resistant
- High impact resistant
- Impervious to chemicals and moisture

Materials tested in accordance with ASTM D-543 and ASTM D-570

### WEIGHTS AND SHIPPING

COVER WEIGHT: 118 lbs.

BOX WEIGHT: 329 lbs.

ASSEMBLY WEIGHT: 447 lbs.

LOADED PALLET WEIGHT: 1848 lbs.

Standard shipping includes van delivery of pallet quantities to the lower 48 states. Partial pallet quantities and flat bed shipping available at an additional cost.

### PACKAGING (Steel Banding, Edge Protection)

PALLET QUANTITY: 4

