FCA306036-90013

NATIONAL GRID - MS 5057

FIBERGLASS / POLYMER CONCRETE ASSEMBLY

30" X 60" X 36"
(For actual dimensions see drawing)

Fiberglass / Polymer Concrete Assembly, Straight Sides With Ring, No Floor, WUC 3.6, ANSI/SCTE 77-"T15/20K, " 1/2" Captive Penta Bolts, (16) 4 3/4" Knockouts, (2) Pulling Eyes, Standard Nameplate (ELECTRIC / mfg. date) Installed

LOAD RATINGS

Incidental Traffic - Parking Lot, Sidewalk
Conforms to:

- WUC 3.6
- ASTM C 857
- ANSI/SCTE 77

FEATURES:

- UL classified polymer concrete
- Drop-In nameplate
- Shipped assembled
- Skid resistant cover
- Stainless steel bolts
- Cast-in floating nut box
  - Integral drain holes

Additional product information continued on the reverse

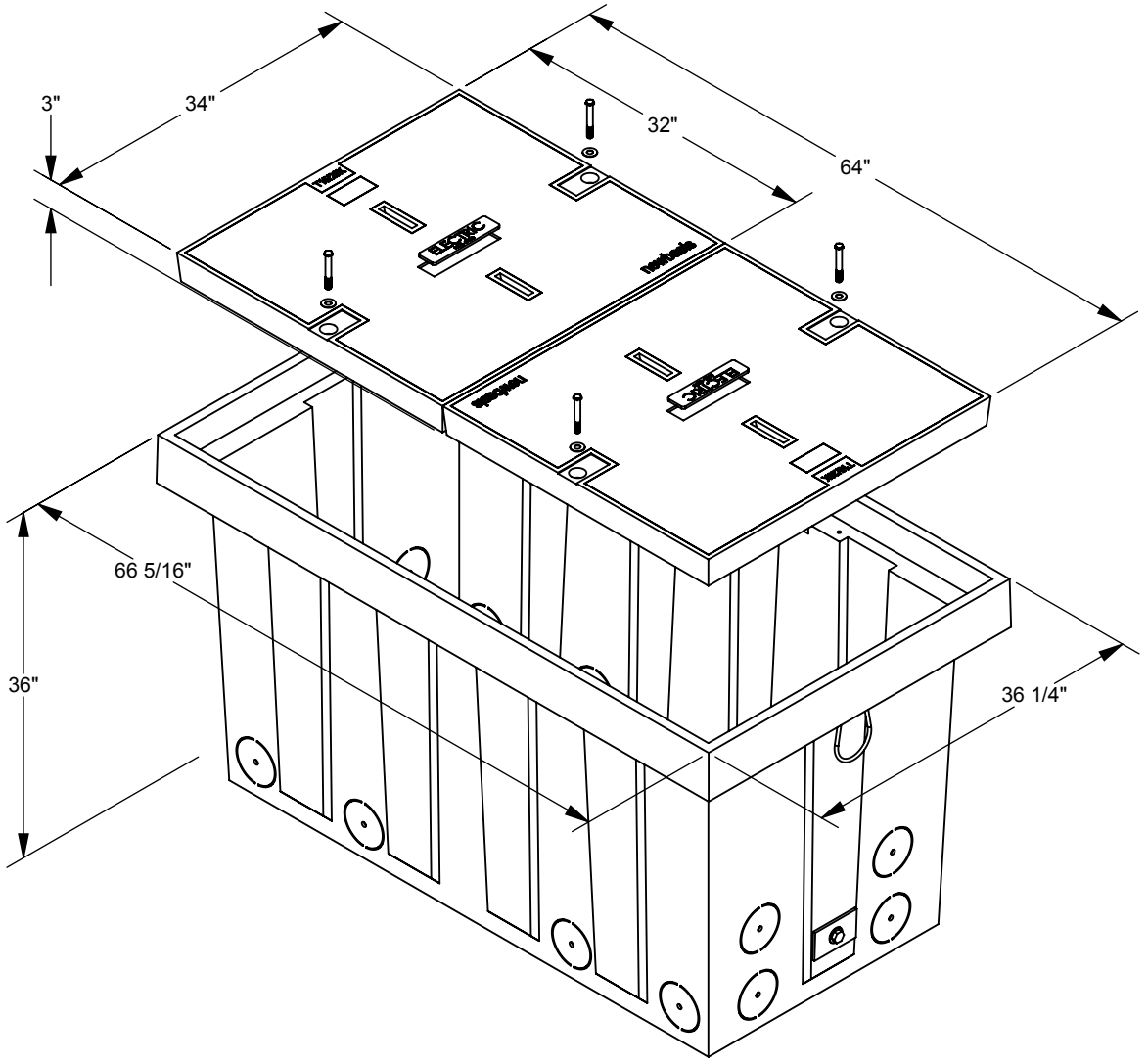

Inside Dimensions		
Length	Width	Depth
59 7/8"	29 7/8"	33 1/8"
54 7/8"	24 7/8"	

newbasis
Composites for Infrastructure

2626 Kansas Avenue
Riverside, California 92507

951.787.0600

951.787.0632 (fax)

info@newbasis.com

newbasis.com

Rev: A.1

FCA306036-90013
NATIONAL GRID - MS5057

FIBERGLASS / POLYMER CONCRETE ASSEMBLY

Fiberglass / Polymer Concrete Assembly, Straight Sides With Ring, No Floor, WUC 3.6, ANSI/SCTE 77-"T15/20K, " 1/2" Captive Penta Bolts, (16) 4 3/4" Knockouts, (2) Pulling Eyes, Standard Nameplate (ELECTRIC / mfg. date) Installed

30" X 60" X 36" **For actual dimensions, see drawing on front side.**

AVAILABLE OPTIONS

- ☑ Penta Bolts
- ☐ Telephone EMS
- ☐ Power EMS
- ☑ 16 Knockouts
- ☑ 2 Pulling Eyes
- ☑ Custom Nameplate Installed
- ☐ Custom Nameplate Shipped Separately
- ☐ Standard Nameplate Installed
- ☐ Standard Nameplate Shipped Separately

☑ - Indicates a selected option

NAMEPLATES

One standard nameplate included with each assembly, installed at the factory or easily installed in the field. Custom nameplates are available. Contact customer service.

Standard Nameplates

- Electric
- Telephone
- Fiber Optic
- Water
- Street Lighting
- Broadband
- Traffic
- CATV
- Traffic Signal
- Communications

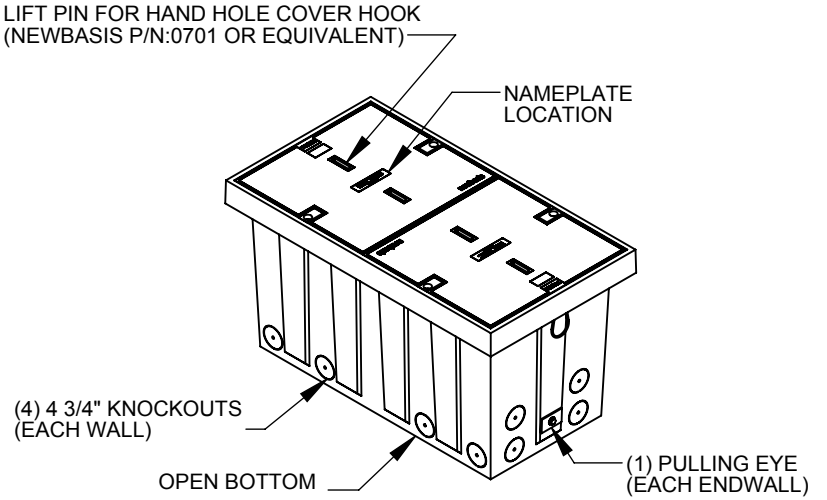

Rev: A.1

MATERIAL PROPERTIES AND ATTRIBUTES

Compressive Strength
Polymer Concrete - **87 MPa**
FRP - **134 MPa**
Per ASTM D695

Flexural Strength
Polymer Concrete - **20 MPa**
FRP - **116 MPa**
Per ASTM D790

Coefficient of Friction (Dry)
1.085
Per ASTM C1028

Polymer Concrete
- Advanced composite: Very high strength to weight ratio
- Non-metallic
- Non-conductive
- UV Resistant
- High impact resistant
- Impervious to chemicals and moisture

Materials tested in accordance with ASTM D-543 and ASTM D-570

WEIGHTS AND SHIPPING

COVER WEIGHT: 324 lbs.

BOX WEIGHT: 366 lbs.

ASSEMBLY WEIGHT: 690 lbs.

LOADED PALLET WEIGHT: 750 lbs.

Standard shipping includes van delivery of pallet quantities to the lower 48 states. Partial pallet quantities and flat bed shipping available at an additional cost.

PACKAGING (Steel Banding, Edge Protection)

PALLET QUANTITY: 1

