FCA243618T-90016

FIBERGLASS / PCX POLYMER CONCRETE ASSEMBLY

24" X 36" X 18"
(For actual dimensions see drawing)

Fiberglass / Polymer Concrete Assembly, Tapered Sides, No Floor, WUC 3.6, ANSI/SCTE 77-"T15/20K, " 1/2" Penta Coil Bolts, Standard Nameplate (ELECTRIC) Installed

LOAD RATINGS
Incidental Traffic - Parking Lot, Sidewalk
Conforms to:
- WUC 3.6
- ASTM C 857
- ANSI/SCTE 77

FEATURES:
- Drop-In nameplate
- Shipped assembled
- Skid resistant cover
- Stainless steel bolts
- Cast-in floating nut box
  - Integral drain holes

Additional product information continued on the reverse

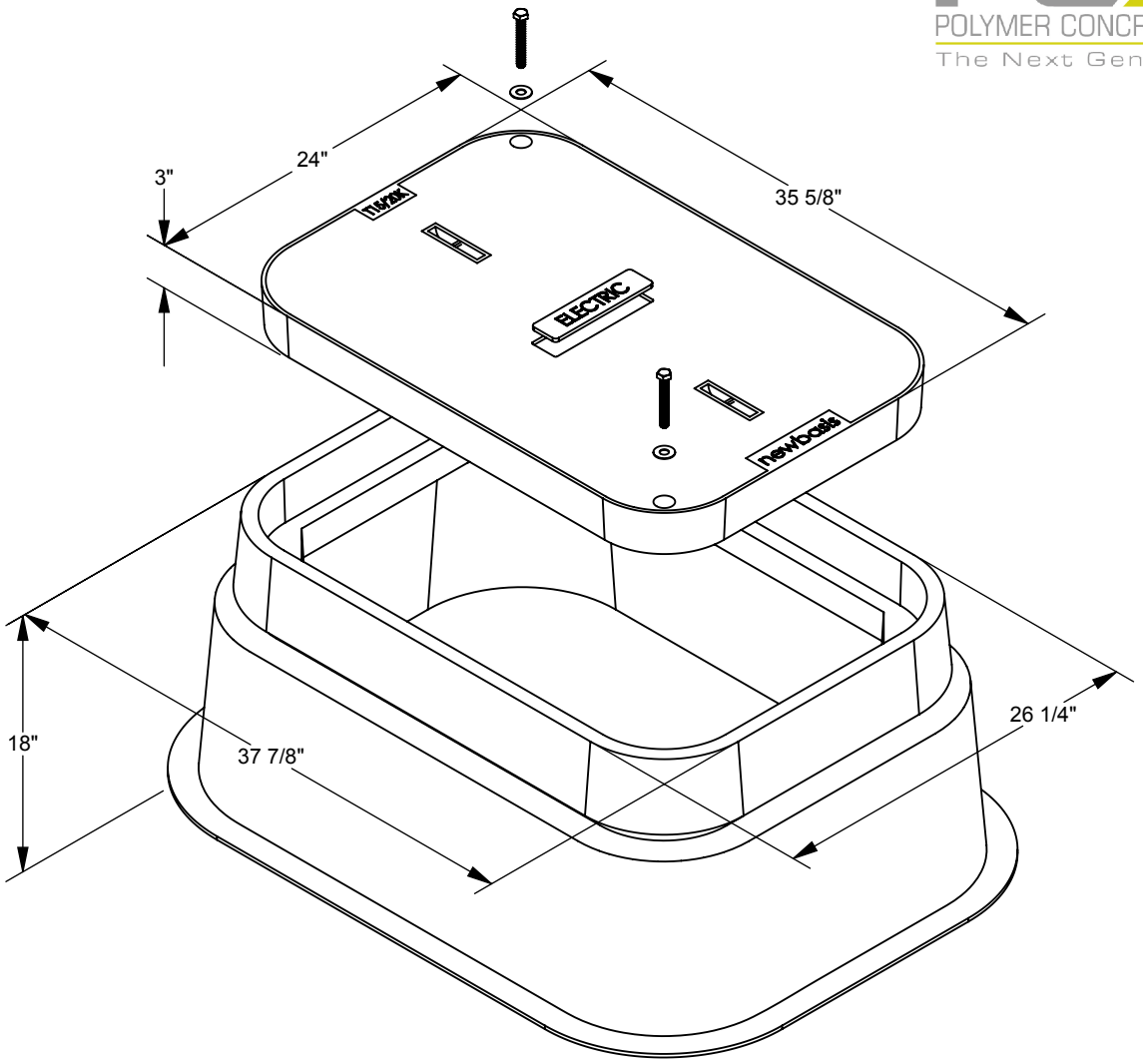

Inside Dimensions		
Length	Width	Depth
33 1/8"	21 1/2"	15"
41 7/8"	30 3/8"	

Rev: A.1

newbasis
Composites for Infrastructure

2626 Kansas Avenue
Riverside, California 92507
951.787.0600
951.787.0632 (fax)
info@newbasis.com
newbasis.com

FCA243618T-90016

FIBERGLASS / PCX POLYMER CONCRETE ASSEMBLY

PCX POLYMER CONCRETE The Next Generation

newbasis

Fiberglass / Polymer Concrete Assembly, Tapered Sides, No Floor, WUC 3.6, ANSI/SCTE 77-"T15/20K," 1/2" Penta Coil Bolts, Standard Nameplate (ELECTRIC) Installed

24" X 36" X 18" **For actual dimensions, see drawing on front side.**

AVAILABLE OPTIONS

- ☑ Penta Coil Bolts
- ☐ Telephone EMS
- ☐ Power EMS
- ☐ Custom Nameplate Installed
- ☐ Custom Nameplate Shipped Separately
- ☑ Standard Nameplate Installed
- ☐ Standard Nameplate Shipped Separately

☑ - Indicates a selected option

NAMEPLATES

One standard nameplate included with each assembly, installed at the factory or easily installed in the field. Custom nameplates are available. Contact customer service.

Standard Nameplates

- Electric
- Telephone
- Fiber Optic
- Water
- Street Lighting
- Broadband
- Traffic
- CATV
- Traffic Signal
- Communications

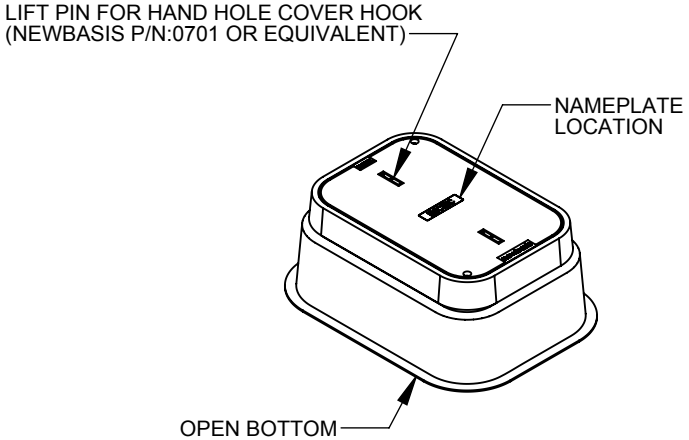

Rev: A.1

MATERIAL PROPERTIES AND ATTRIBUTES

Compressive Strength
Polymer Concrete - 11,500 PSI
FRP - 19,440 PSI
Per ASTM D695

Flexural Strength
Polymer Concrete - 4,000 PSI
FRP - 16,830 PSI
Per ASTM D790

Coefficient of Friction (Dry)
1.085
Per ASTM C1028

Polymer Concrete
- Advanced composite: Very high strength to weight ratio
- Non-metallic
- Non-conductive
- UV Resistant
- High impact resistant
- Impervious to chemicals and moisture

Materials tested in accordance with ASTM D-543 and ASTM D-570

WEIGHTS AND SHIPPING

COVER WEIGHT: 98 lbs.

BOX WEIGHT: 97.7 lbs.

ASSEMBLY WEIGHT: 195.7 lbs.

LOADED PALLET WEIGHT: 1021.3 lbs.

Standard shipping includes van delivery of pallet quantities to the lower 48 states. Partial pallet quantities and flat bed shipping available at an additional cost.

PACKAGING (Steel Banding, Edge Protection)

PALLET QUANTITY: 5

