FCA173034T-90001

OIN# 100035273

FIBERGLASS / PCX POLYMER CONCRETE ASSEMBLY

17" X 30" X 34"
(For actual dimensions see drawing)

Fiberglass / Polymer Concrete Assembly, Tapered Sides, No Floor, WUC 3.6, ANSI/ SCTE 77-"T15/20K," 3/8" Captive Auger Tip Hex Bolts, Telephone EMS, Hanger Bar, Saddle Bracket, (4) Racks, (4) Knockouts, Custom Nameplate (AT&T USE 100006201 COVER HOOK ONLY) Cast-in

LOAD RATINGS

Incidental Traffic - Parking Lot, Sidewalk
Conforms to:
- WUC 3.6
- ASTM C 857
- ANSI/SCTE 77 - 2010

FEATURES:
- USDA/RUS Approved
- Cast-in nameplate
- Shipped assembled
- Skid resistant cover
- Stainless steel bolts
- Cast-in floating nut box
  - Integral drain holes

Additional product information continued on sheet 2

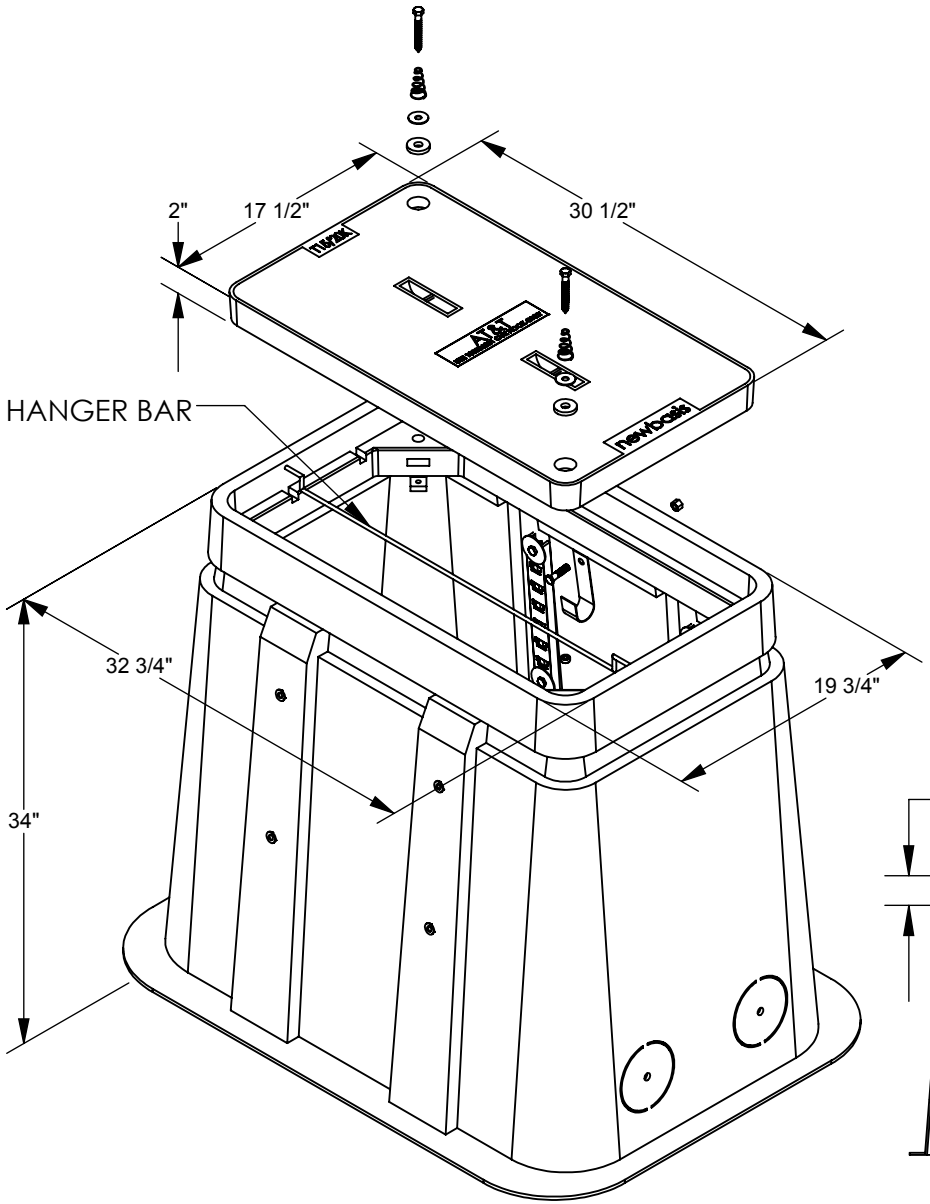

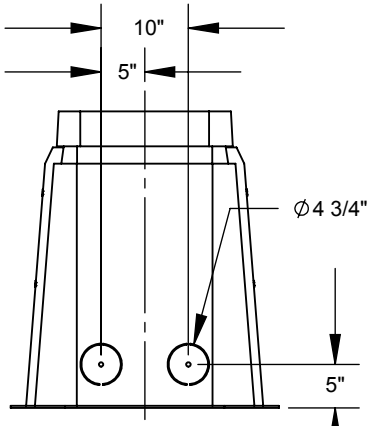

KNOCKOUT DETAIL

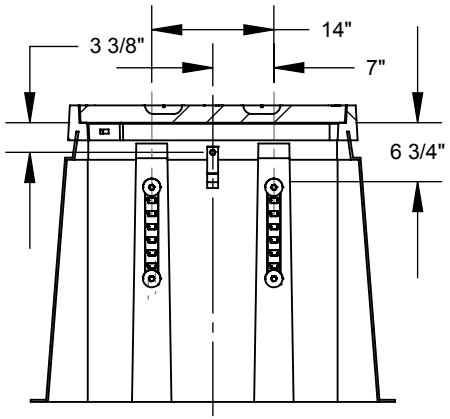

SADDLE BRACKET, RACK DETAIL

Inside Dimensions		
Length	Width	Depth
28 3/4"	15 3/4"	32"
37 1/4"	24 1/4"	

Rev: A.11

newbasis
Composites for Infrastructure

2626 Kansas Avenue
Riverside, California 92507

951.787.0600

951.787.0632 (fax)

info@newbasis.com

newbasis.com

FCA173034T-90001

OIN# 100035273

FIBERGLASS / PCX POLYMER CONCRETE ASSEMBLY

Fiberglass / Polymer Concrete Assembly, Tapered Sides, No Floor, WUC 3.6, ANSI/ SCTE 77-"T15/20K," 3/8" Captive Auger Tip Hex Bolts, Telephone EMS, Hanger Bar, Saddle Bracket, (4) Racks, (4) Knockouts, Custom Nameplate (AT&T USE 100006201 COVER HOOK ONLY) Cast-in

17" X 30" X 34" **For actual dimensions, see drawing on front side.**

AVAILABLE OPTIONS

- ☐ Penta Bolts
- ☑ Auger Tip Hex Bolts
- ☑ Captive Hardware
- ☑ Telephone EMS
- ☐ Power EMS
- ☑ Hanger Bar
- ☑ Saddle Bracket
- ☑ 4 Knockouts
- ☑ 4 Racks
- ☐ Custom Nameplate Installed
- ☐ Custom Nameplate Shipped Separately
- ☑ Custom Nameplate Cast-in
- ☐ Standard Nameplate Installed
- ☐ Standard Nameplate Shipped Separately
- ☐ Standard Nameplate Cast-in

☑ - Indicates a selected option

NAMEPLATES

One standard nameplate included with each assembly, installed at the factory or easily installed in the field. Custom nameplates are available. Contact customer service.

Standard Nameplates

- Electric
- Telephone
- Fiber Optic
- Street Lighting
- Traffic
- CATV
- Communications

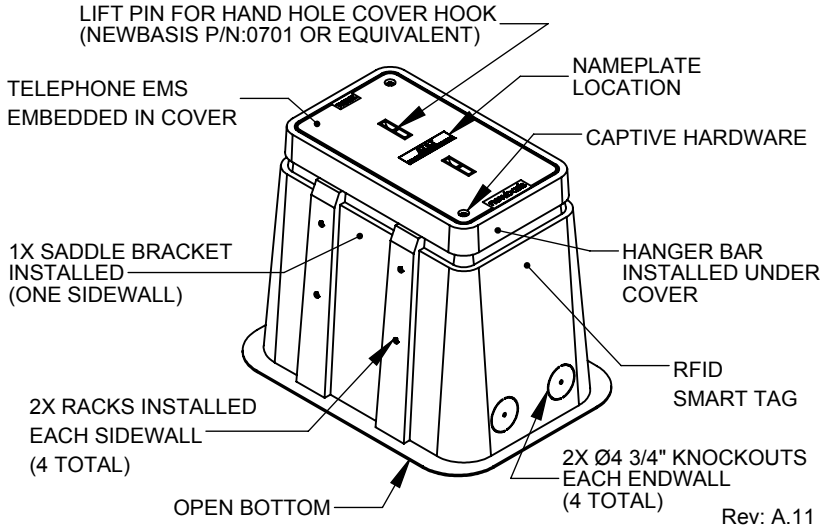

Rev: A.11

MATERIAL PROPERTIES AND ATTRIBUTES

Compressive Strength
PCX Polymer Concrete - 11,500 PSI
FRP - 19,440 PSI
Per ASTM D695

Flexural Strength
PCX Polymer Concrete - 4,000 PSI
FRP - 16,830 PSI
Per ASTM D790

Coefficient of Friction (Dry)
1.085
Per ASTM C1028

PCX Polymer Concrete
- Advanced composite: Very high strength to weight ratio
- Non-metallic
- Non-conductive
- UV Resistant
- High impact resistant
- Impervious to chemicals and moisture

Materials tested in accordance with ASTM D-543 and ASTM D-570

WEIGHTS AND SHIPPING

COVER WEIGHT: 57.9 lbs.

BOX WEIGHT: 59.6 lbs.

ASSEMBLY WEIGHT: 117.5 lbs.

LOADED PALLET WEIGHT: 1,225.8 lbs.

Standard shipping includes van delivery of pallet quantities to the lower 48 states. Partial pallet quantities and flat bed shipping available at an additional cost.

PACKAGING (Steel Banding, Edge Protection)

PALLET QUANTITY: 10

