Archived: Thursday, October 23, 2025 10:31:12 AM
From: Amanda Froman
Mail received time: Tue, 21 Oct 2025 03:34:48
Sent: Tue, 21 Oct 2025 03:32:30
To: Neal, Erin@DTSC
Cc: Ken Habaradas
Subject: RE: CCL: Response to DTSC's June 20, 2025 Compliance Requirements Letter
Importance: Normal
Sensitivity: None
Attachments: TF13_Post Treatment Layout_09-21-25.pdf; TF13_Pre Treatment Layout_10-05-25.pdf; Tank Farm 10 Layout 2025-1017.pdf; Tank Farm 7 Layout 2025-1017.pdf; CCL MASTER LMS ASBUILT_2025-10-20.pdf;

[EXTERNAL SENDER: Use caution with links/attachments]

All,

On behalf of Chiquita Canyon, LLC, attached please find the most up to date tank farm and wellfield maps, which are being submitted pursuant to DTSC's June 20, 2025 compliance requirement letter and consistent with Chiquita's July 25, 2025 response.

Please let us know if you have questions.

Regards,

Amanda Froman
Compliance Manager
Chiquita Canyon Landfill
(m) 661-625-1409

From: Amanda Froman <Amanda.Froman@WasteConnections.com>
Sent: Friday, July 25, 2025 5:22 PM
To: Neal, Erin@DTSC <erin.neal@dtsc.ca.gov>; Zmily, Zanalee@DTSC <zanalee.zmily@dtsc.ca.gov>; Clark, Dylan@DTSC <dylan.clark@dtsc.ca.gov>
Cc: Ken Habaradas <khabaradas@ph.lacounty.gov>; Robert Ragland <rragland@ph.lacounty.gov>; Liza Frias <lfrias@ph.lacounty.gov>; Nichole Quick <nquick@ph.lacounty.gov>; Shikari Nakagawa-Ota <sota@ph.lacounty.gov>; Karen Gork <kgork@ph.lacounty.gov>; Renee Jensen <rjensen@fwhb.com>; Blaine McPhillips <bmcphillips@counsel.lacounty.gov>; Emiko Thompson <ethomp@dpw.lacounty.gov>; Alex Garcia <agarcia@planning.lacounty.gov>; Ai-Viet Huynh <ahuynh@planning.lacounty.gov>; Mindermann, Wes@CalRecycle <wes.mindermann@calrecycle.ca.gov>; Thalhamer, Todd@CalRecycle <todd.thalhamer@calrecycle.ca.gov>; Lindberg, Jeff@ARB <jeff.lindberg@arb.ca.gov>; Jack Cheng <jcheng@aqmd.gov>; Larry Israel <lisrael@aqmd.gov>; Casas, Enrique@Waterboards <enrique.casas@waterboards.ca.gov>; Thanne.Berg@dtsc.ca.gov; Dan.Ziarkowski@dtsc.ca.gov; Peter.Ruttan@dtsc.ca.gov; Tim.Crick@dtsc.ca.gov; Diane.Barclay@dtsc.ca.gov; Christopher.Kane@dtsc.ca.gov; Johnathon.Crook@dtsc.ca.gov; Lisa.Winebarger@dtsc.ca.gov; Dylan Smith <Dylan.Smith@WasteConnections.com>; Sarah Phillips <Sarah.Phillips@WasteConnections.com>; Kate Logan <Kate.Logan@WasteConnections.com>; Steve Cassulo <Steven.Cassulo@WasteConnections.com>; John Perkey

<John.Perkey@WasteConnections.com>; Megan L. Morgan <MMorgan@bdlaw.com>; Nicole B. Weinstein <nweinstein@bdlaw.com>
Subject: CCL: Response to DTSC's June 20, 2025 Compliance Requirements Letter

[EXTERNAL SENDER: Use caution with links/attachments]

All—

On behalf of CCL, attached please find a response to DTSC's June 20, 2025 compliance requirement letter.

Please let us know if you have questions or would like to have a call to discuss.

Regards,

Amanda Froman
Compliance Manager
Chiquita Canyon Landfill
Waste Connections, Inc.
(m) 661-625-1409

CCL Tier 3
POST TREATMENT

4" Black Line : Treatment Fill Pipe

4" Blue Line : Loadout Pull Pipe

4" Orange Line : Retreat Pipe

TREATED TANKS
Total = 80

EAST TREATMENT
- Bank #1
- Bank #2
- Bank #3
- Bank #4
- Bank #5
- Bank #6

WEST TREATMENT
- Bank #7
- Bank #8
- Bank #9
- Bank #10
- Bank #11
- Bank #12
- Bank #13

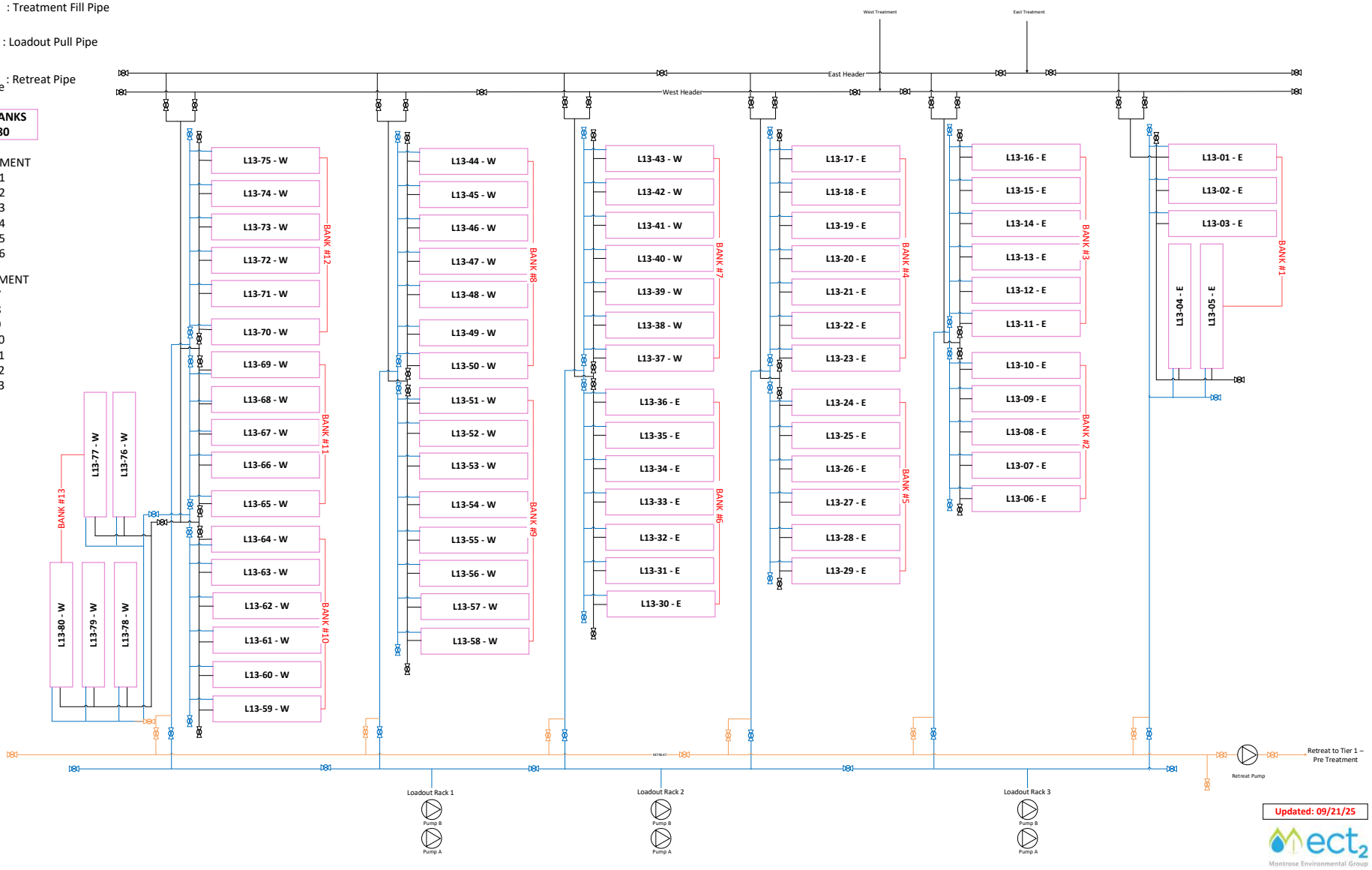

Updated: 09/21/25

Montrose Environmental Group

CCL Tier 1
PRE-TREATMENT

4" Green Line
HAZ Loadout

4" Black Line
Treatment Pipe

4" Orange Line
Retreat Pipe

8" Red Line
Inlet Feed Pipe

4" Purple Line
Backwash &
Dewatering Pipe

4" Blue Line
Sludge Tanks
Fill/Pull Pipe

Clarifier Tanks = 16

Influent Tanks = 38

Reserve Influent Tanks = 20

Sludge Tanks = 5

H2S Condensate

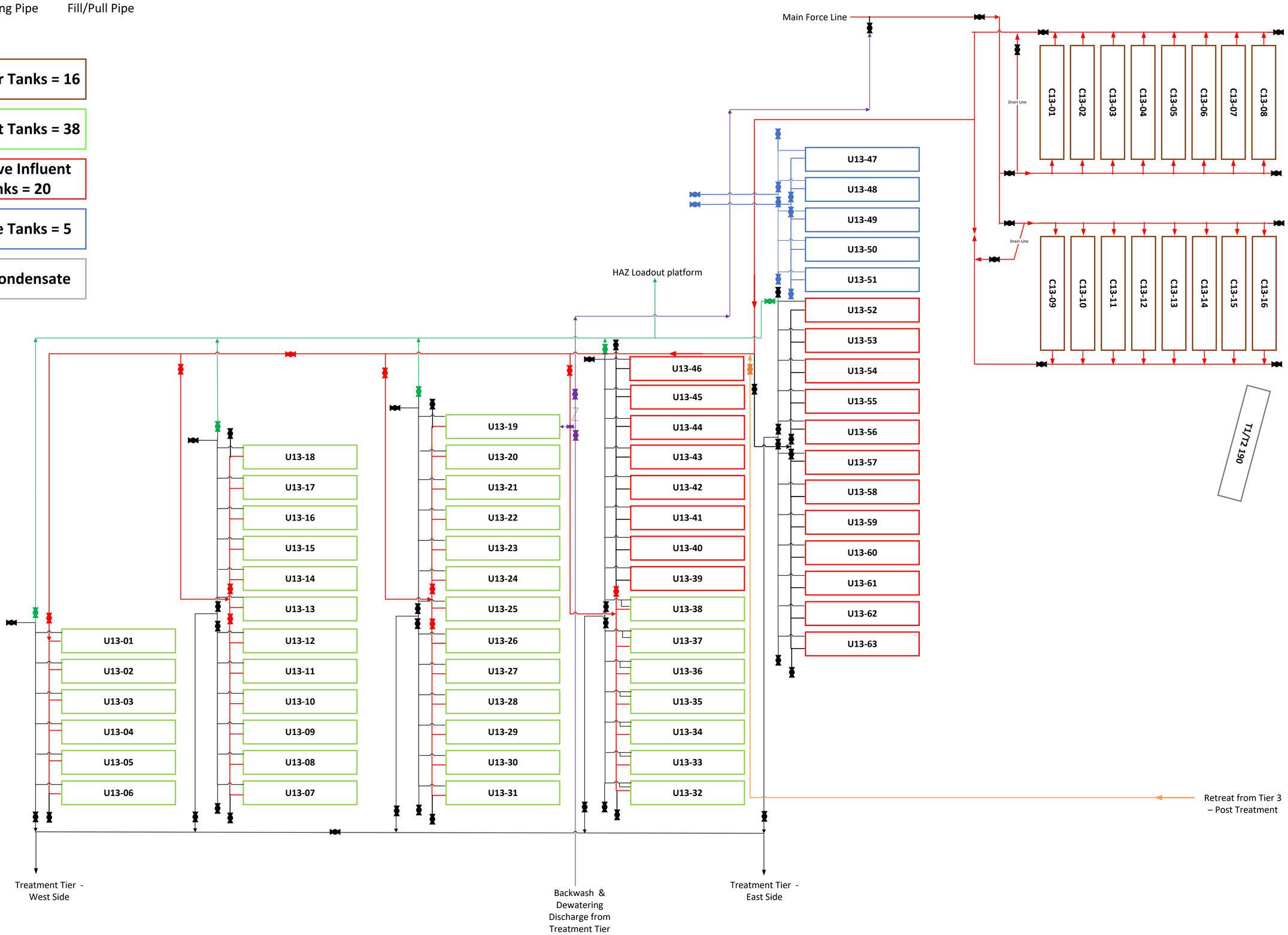

Updated: 10/5/25

Montrose Environmental Group

CCL – TF10

Updated: 10/17/25

In Service

Not in Service

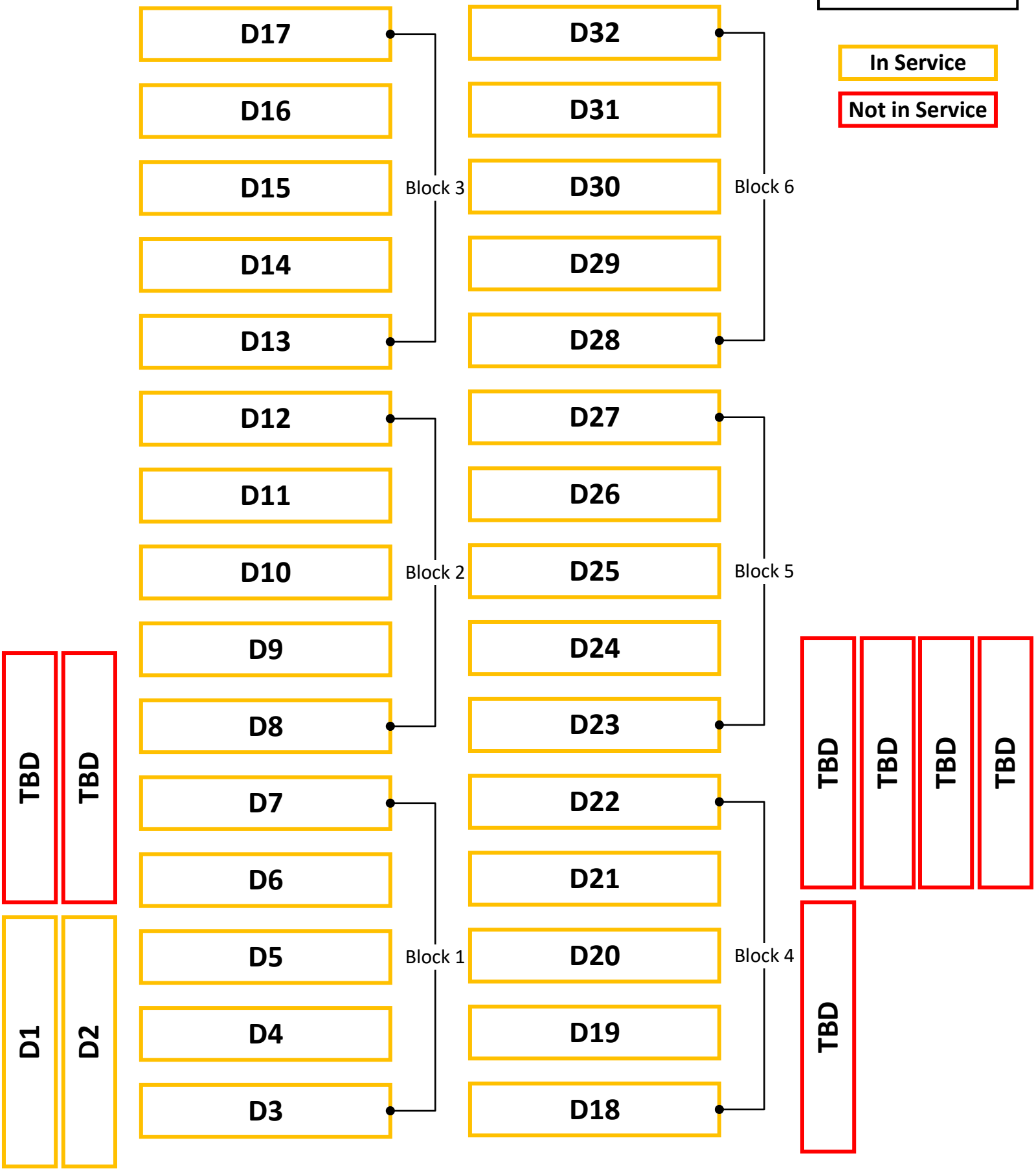

CCL – TF7

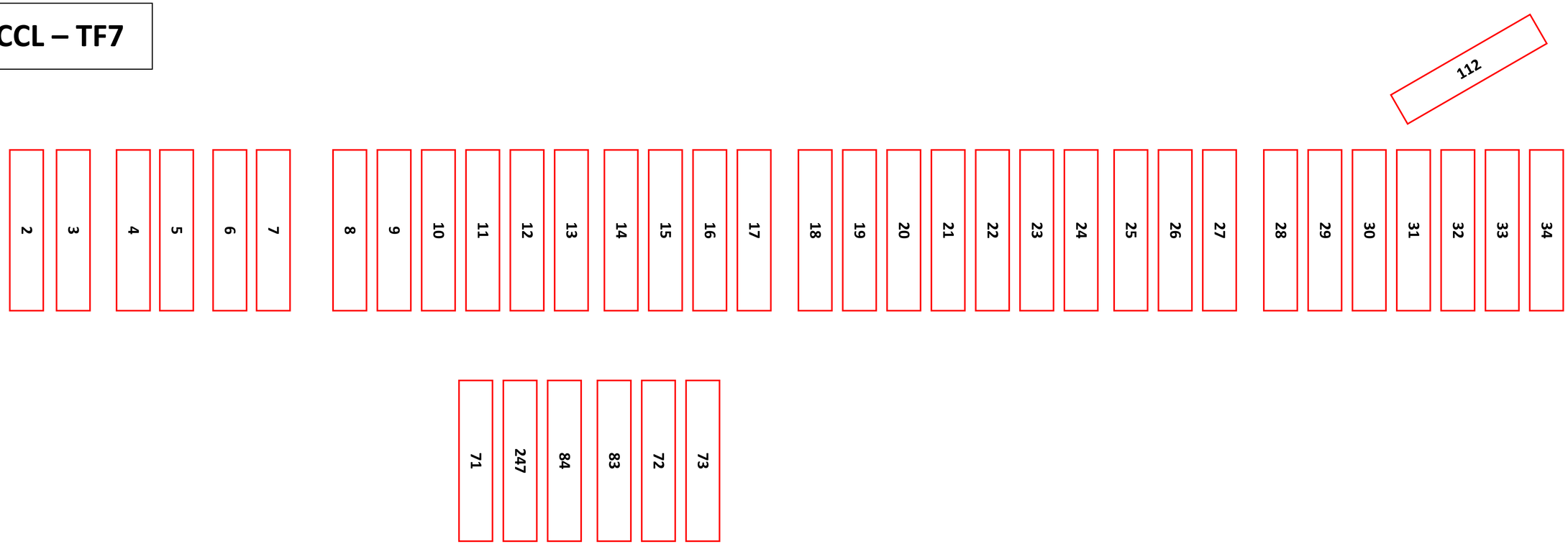

LCM-05	LCM-06	LCM-15	SW-03	SW-04
LCM-04	LCM-07	LCM-14	SW-02	SW-05
LCM-03	LCM-08	LCM-13	SW-01	SW-06
LCM-02	LCM-09	LCM-12	44	SW-07
LCM-01	LCM-10	LCM-11	111	SW-08

NOT IN SERVICE

CONDENSATE

B-SUMP

Storm Water

LCM

Updated: 10/17/25

Montrose Environmental Group

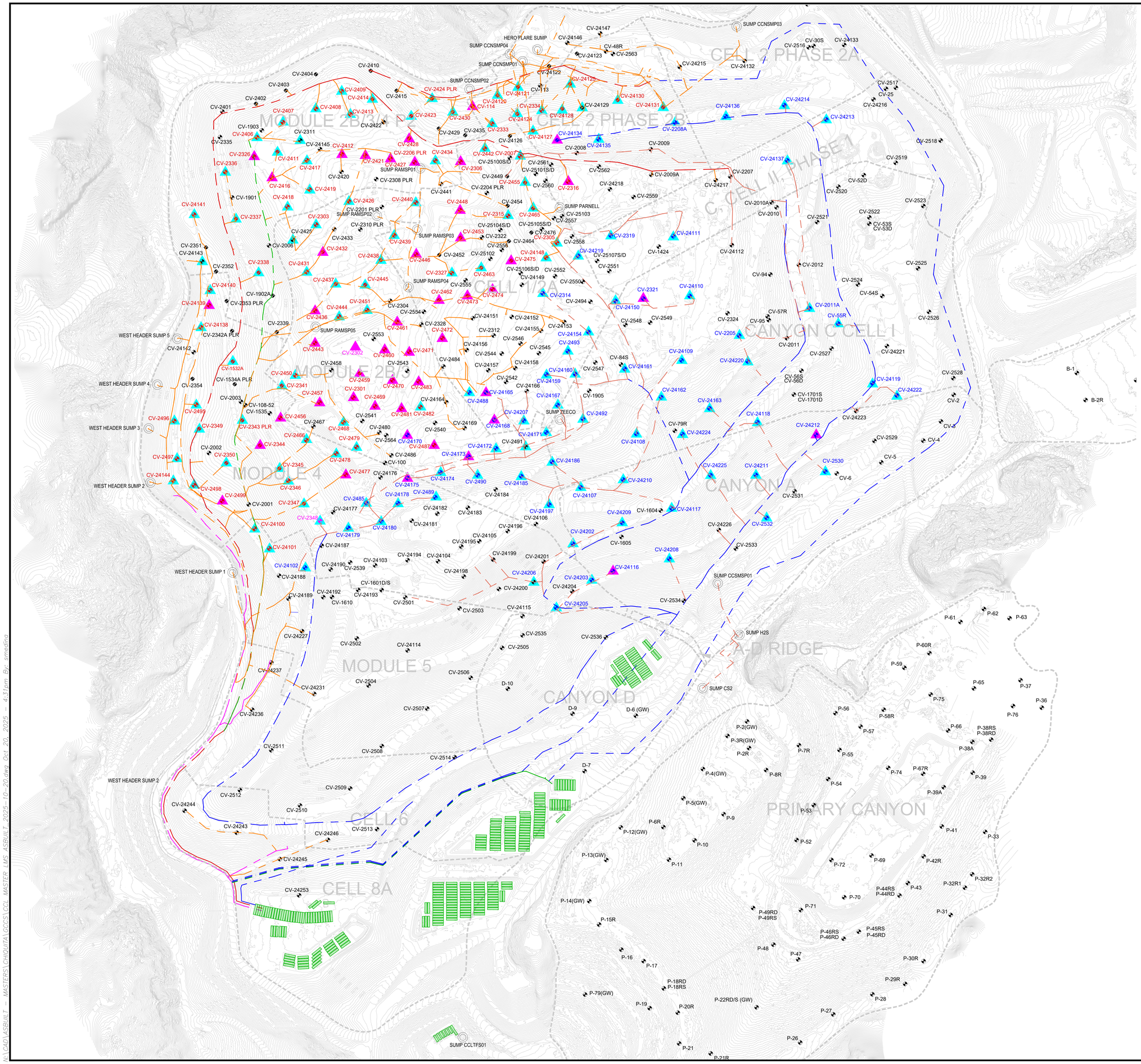

N

GRAPHIC SCALE

120 60 0 120 240 360

SCALE: 1"=120'

LEGEND

- EXISTING TOPOGRAPHIC CONTOUR
- EXISTING CELL LIMITS (APPROXIMATE)
- CV-XX EXISTING VERTICAL LFG EXTRACTION WELL
- EXISTING CONDENSATE SUMP
- EXISTING DE-WATERING WELL WITH PUMP - CURRENTLY RUNNING
- EXISTING DE-WATERING WELL WITH PUMP - INSTALLED
- EXISTING FRAC TANK
- EXISTING 8" (A) FORCEMAIN
- EXISTING 6" (A) FORCEMAIN
- EXISTING 4" (A) FORCEMAIN
- EXISTING 6" (B) FORCEMAIN
- EXISTING 6" (C) FORCEMAIN
- EXISTING 4" (C) FORCEMAIN
- GROUP A SAMPLE PORT
- GROUP B SAMPLE PORT
- GROUP C SAMPLE PORT

GENERAL DRAWING NOTES:

1. EXISTING TOPOGRAPHIC SURVEY INFORMATION SHOWN WAS PROVIDED BY PROPELLOR. AERIAL PHOTOGRAPHY DATED OCTOBER 08, 2025.
2. NORTH ARROW SHOWN HERE IS REFERENCE TO THE CALIFORNIA STATE PLANE ZONE V COORDINATE SYSTEM, NAD 83.
3. THE LOCATION OF ANY EXISTING PIPING, VALVES, TIE-IN LOCATIONS AND OTHER FEATURES ARE APPROXIMATE AND SHOULD BE USED FOR INFORMATION PURPOSES ONLY. ACTUAL FIELD CONDITIONS MAY VARY AND SUBJECT TO CHANGE BASED ON FUTURE FILL OPERATIONS, WASTE PLACEMENT, TOPOGRAPHIC FEATURES, AND OTHER SITE-SPECIFIC FACTORS.

NO.	REVISION	DATE

SHEET TITLE: EXISTING DE-WATERING SYSTEM MAP

PROJECT TITLE: CHIQUITA CANYON LANDFILL CASTAIC, CALIFORNIA

CLIENT: CHIQUITA CANYON LANDFILL CASTAIC, CALIFORNIA

SCS ENGINEERS
ENVIRONMENTAL CONSULTANTS
3900 KILROSS AVENUE, SUITE 300
LONG BEACH, CA 90806
PH.: (562) 426-9544

PROJ. NO.	-
DSN. BY:	-
DWN. BY:	SRM
CHK. BY:	-
APP. BY:	-
FILNO:	F/FIELD SERVICES

DATE: 10/20/2025

SCALE: AS SHOWN

1 of 1

N:\CAD\ASBUILT - MASTERS\CHIQUITA\GCCS\CCL MASTER LMS ASBUILT 2025-10-20.dwg Oct 20, 2025 - 4:31pm By: smedina